ALBANIAN DEVELOPMENT FUND

Consulting Services for Project Preparation and Final Design,
Construction/ Reconstruction of Water Supply Systems in Rural Areas (RWSP III Albania)

REAN 95
PROJEKTIM MBIKQYRJE KOLAUDIM

RIVITALIZIM TE PROJEKTIT TË RRJETIT TË KANALIZIMEVE TË ZEZA TË FSHATIT TRAGJAS

OBJEKTI:

“Ndertim Rrjet Shperndares Ujesjellesi per Fshatin Tragjas,Rehabilitim dhe venie ne funksion i Rrjetit KUZ Fshati Tragjas”

Razije Naipi

Digitally signed by Razije Naipi
Date: 2026.05.17 20:51:14 +02'00'

Shkurt -Mars 2026

ALBANIAN DEVELOPMENT FUND

Consulting Services for Project Preparation and Final Design,
Construction/ Reconstruction of Water Supply Systems in Rural Areas (RWSP III Albania)

REAN 95
PROJEKTIM MBIKQYRJE KOLAUDIM

RIVITALIZIM TE PROJEKTIT TË RRJETIT TË KANALIZIMEVE TË ZEZA TË FSHATIT TRAGJAS

OBJEKTI:

“Ndertim Rrjet Shperndares Ujesjellesi per Fshatin Tragjas,Rehabilitim dhe venie ne funksion i Rrjetit KUZ Fshati Tragjas”

PERMLEDHESE-

1.Projekti rrjetit KUZ Zona 1 ;2; 3 që nuk janë përfshirë në Projektin Fillestar
2.Detaj Seksion Germimi
3.Detaj Pusete LCC
4.Detaj kalim proi te tubacionit KUZ
5.Lidhjet e KUZ-te familjareve
6.Pusetat KUZ
7.Pusete plastike KUZ

Razije Naipi

Digitally signed by Razije Naipi
Date: 2026.05.17 20:51:14 +02'00'

Maj 2026

ORTHOFOTO E RRJETI T KUZ TRAGJAS - ZONA 1; 2 DHE 3-LAGJE TE PA PËRFSHIRA
NË PROJEKTIN FILLESTAR SHK 1:7500

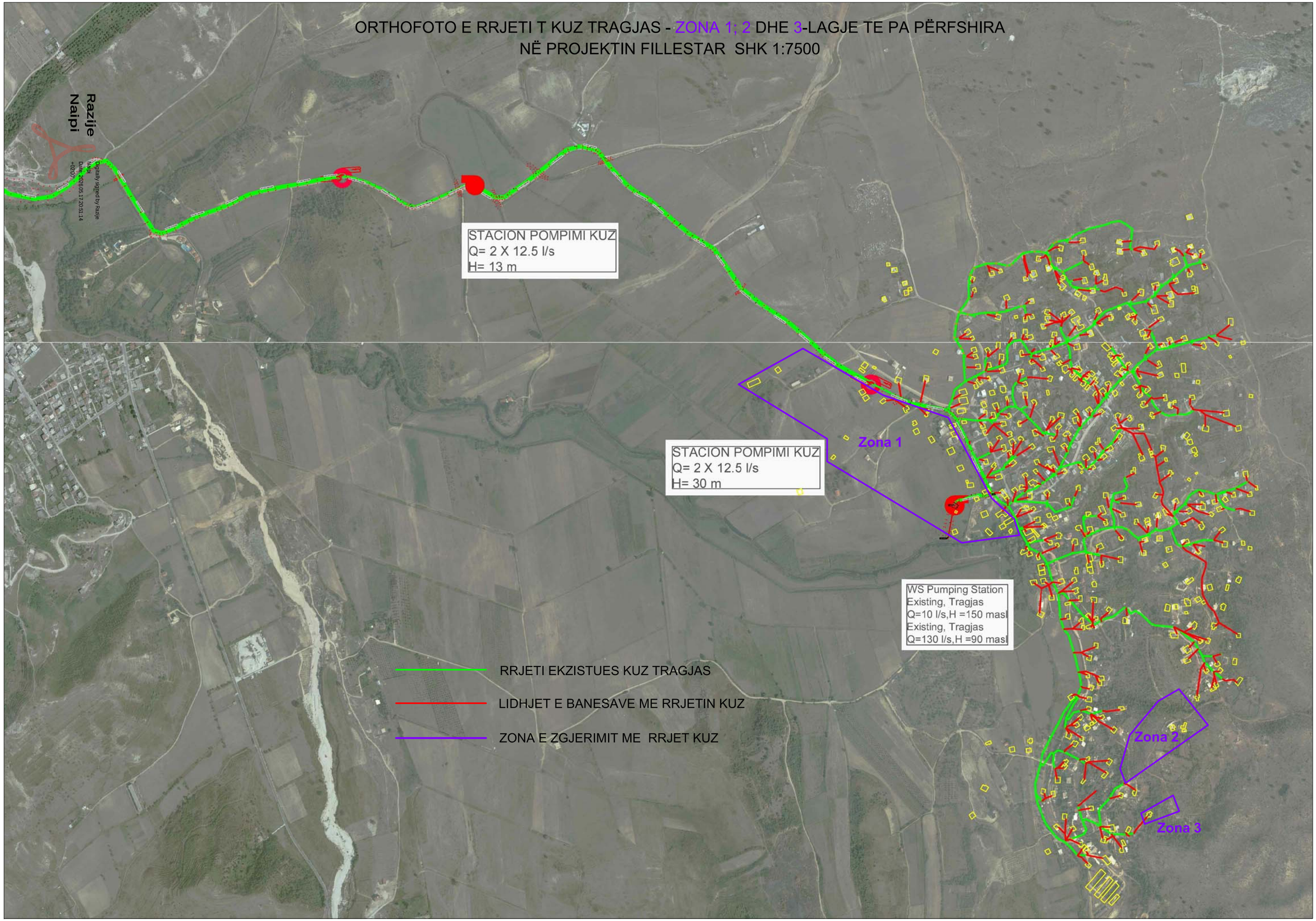

RRJETI KUZ **ZONA 1** LAGJA NË HYRJE TË TRAGJASIT E PA PËRFSHIRË NË PROJEKTIN FILLESTAR

SHK. 1:1500

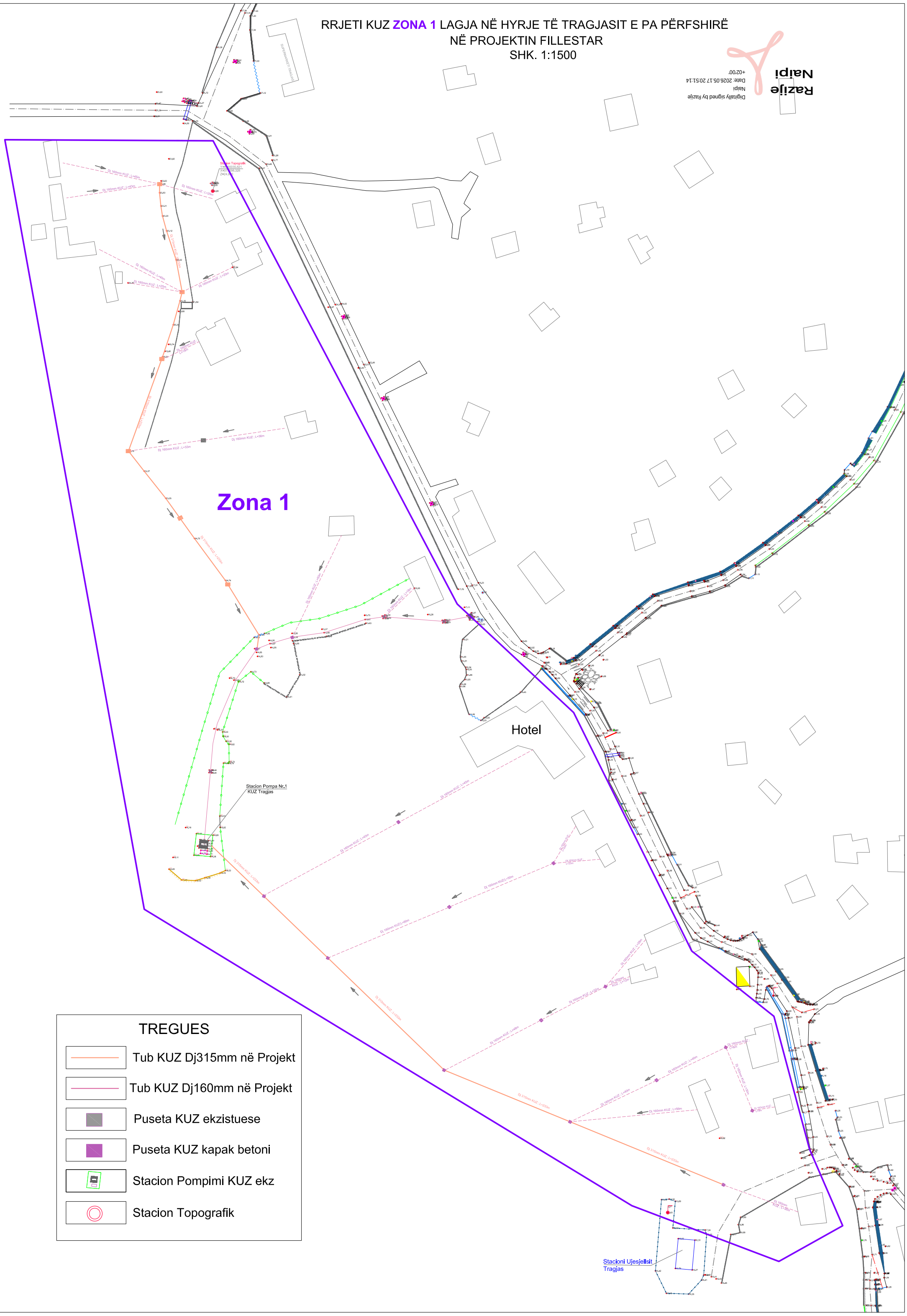

Razije Naipi

Digitally signed by Razije Naipi

Date: 2026.05.17 20:51:14 +02'00'

RRJETI KUZ **ZONA 1** LAGJA NË HYRJE TË TRAGJASIT E PA PËRFSHIRË NË PROJEKTIN FILLESTAR

SHK. 1:500

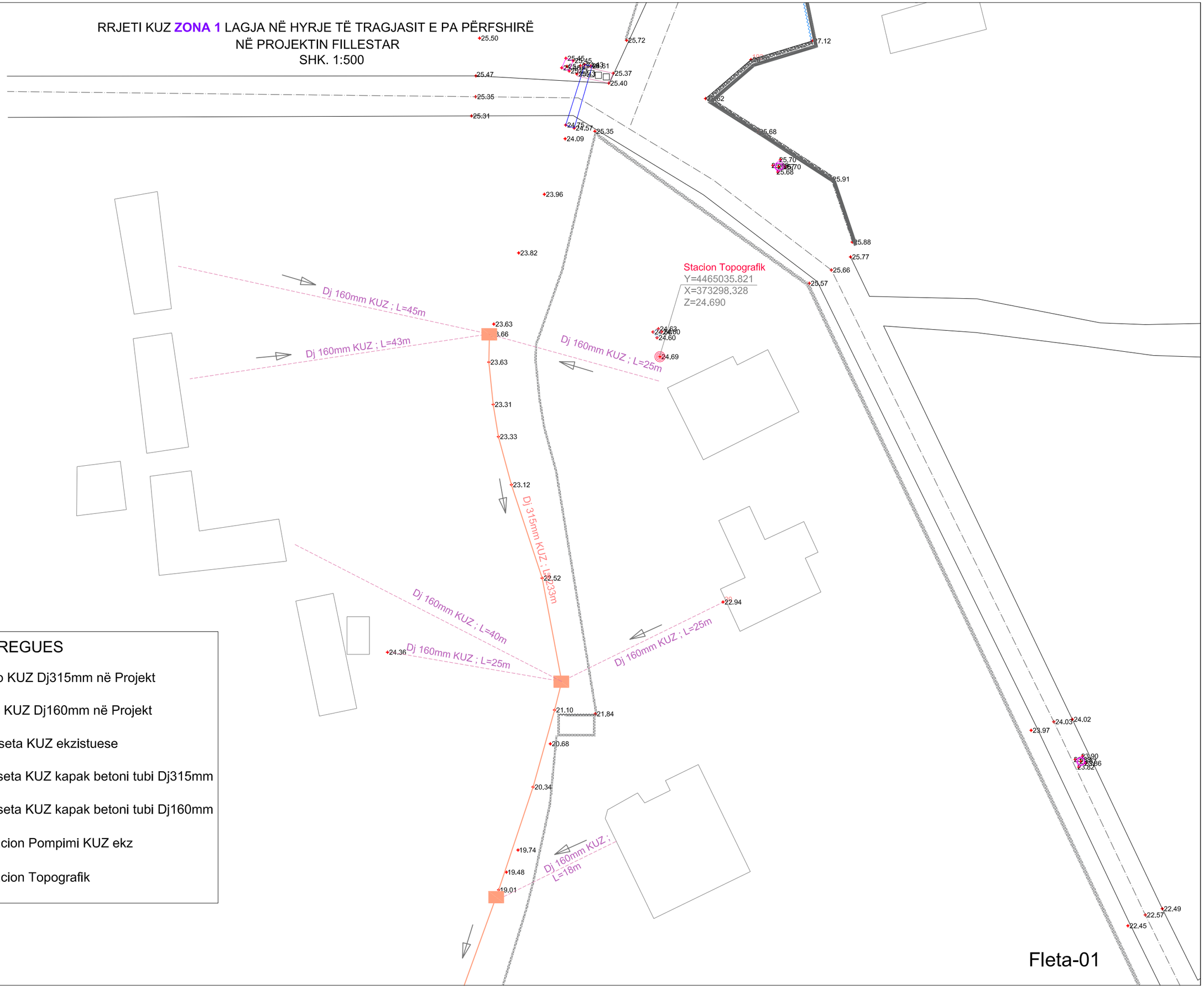

TREGUES

- Tub KUZ Dj315mm në Projekt
- Tub KUZ Dj160mm në Projekt
- Puseta KUZ ekzistuese
- Puseta KUZ kapak betoni tubi Dj315mm
- Puseta KUZ kapak betoni tubi Dj160mm
- Stacion Pompimi KUZ ekz
- Stacion Topografik

Razije Naipi

Digitally signed by Razije Naipi
Date: 2026.05.17 20:51:14 +02'00'

Fleta-01

RRJETI KUZ **ZONA 1** LAGJA NË HYRJE TË TRAGJASIT E PA PËRFSHIRË NË PROJEKTIN FILLESTAR

SHK. 1:500

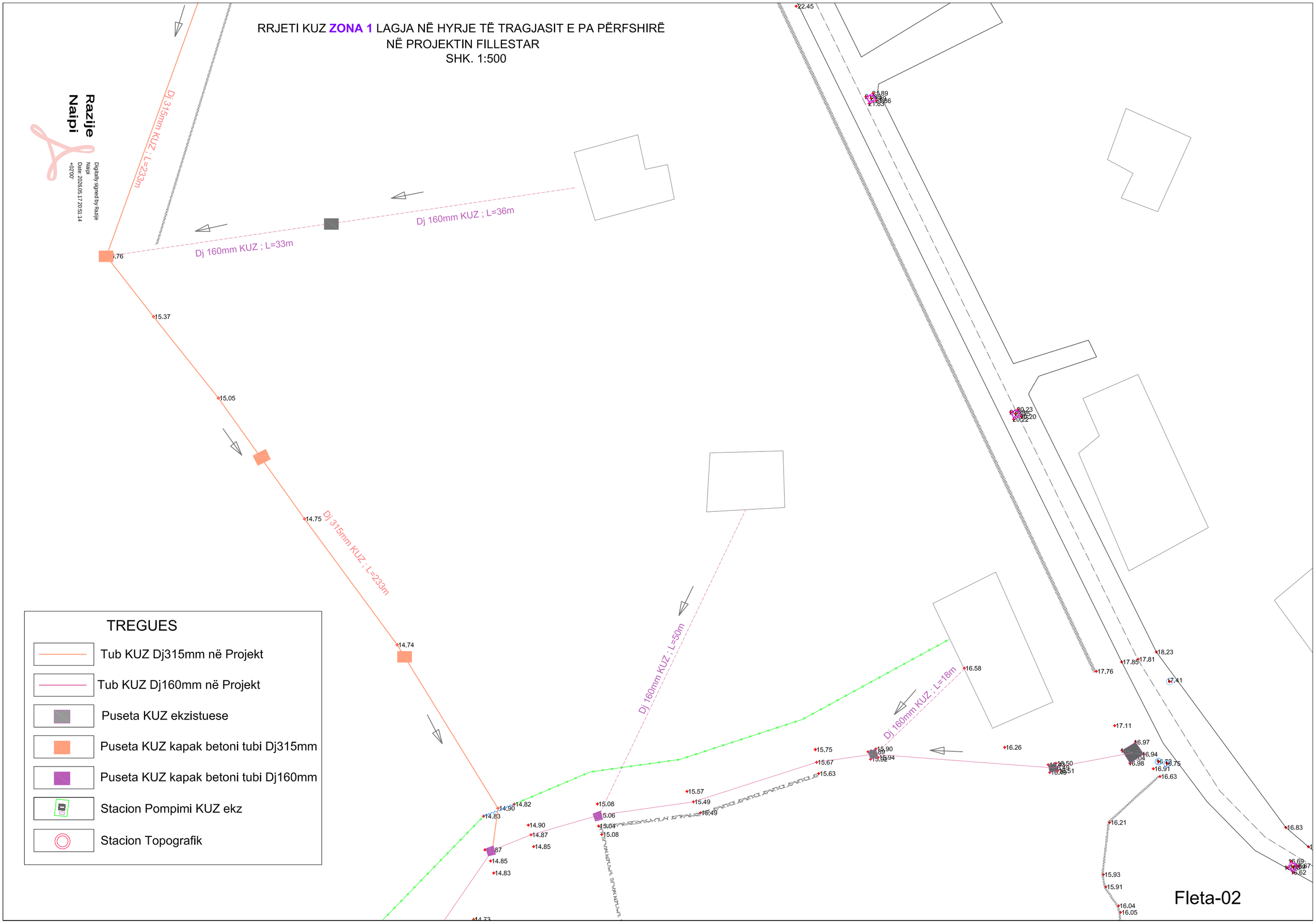

Razije Naipi

Digitally signed by Razije Naipi
Date: 2026.05.17 20:51:14 +02'00'

RRJETI KUZ **ZONA 1** LAGJA NË HYRJE TË TRAGJASIT E PA PËRFSHIRË
NË PROJEKTIN FILLESTAR
SHK. 1:500

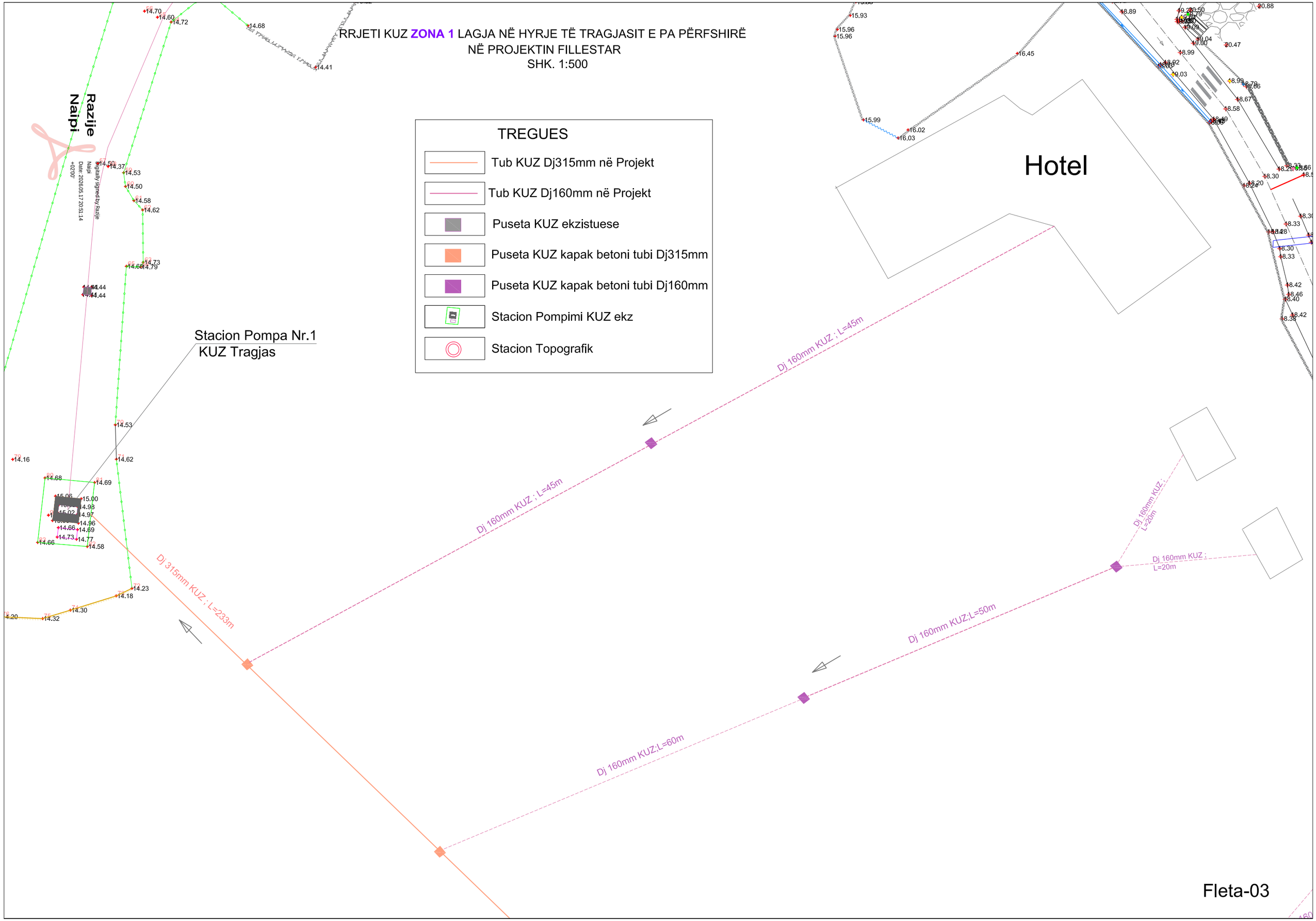

Fleta-03

RRJETI KUZ **ZONA 1** LAGJA NË HYRJE TË TRAGJASIT E PA PËRFSHIRË
NË PROJEKTIN FILLESTAR
SHK. 1:500

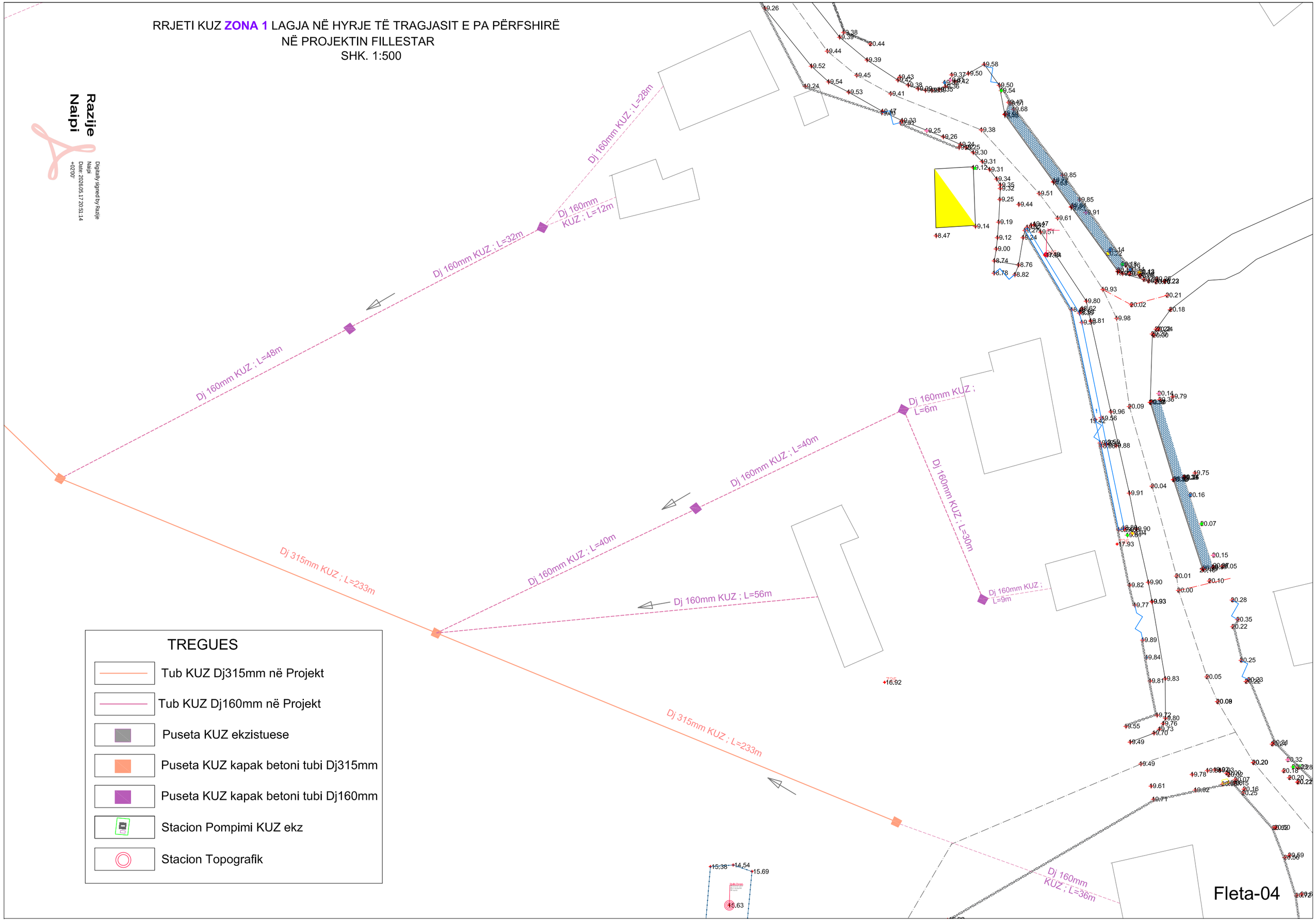

Razije Naipi

Digitally signed by Razije Naipi
Date: 2026.05.17 20:51:14 +02'00'

RRJETI KUZ ZONA 2 LAGJA E SIPËRME E TRAGJASIT E PA PËRFSHIRË NË PROJEKTIN FILLESTAR

SHK. 1:1500

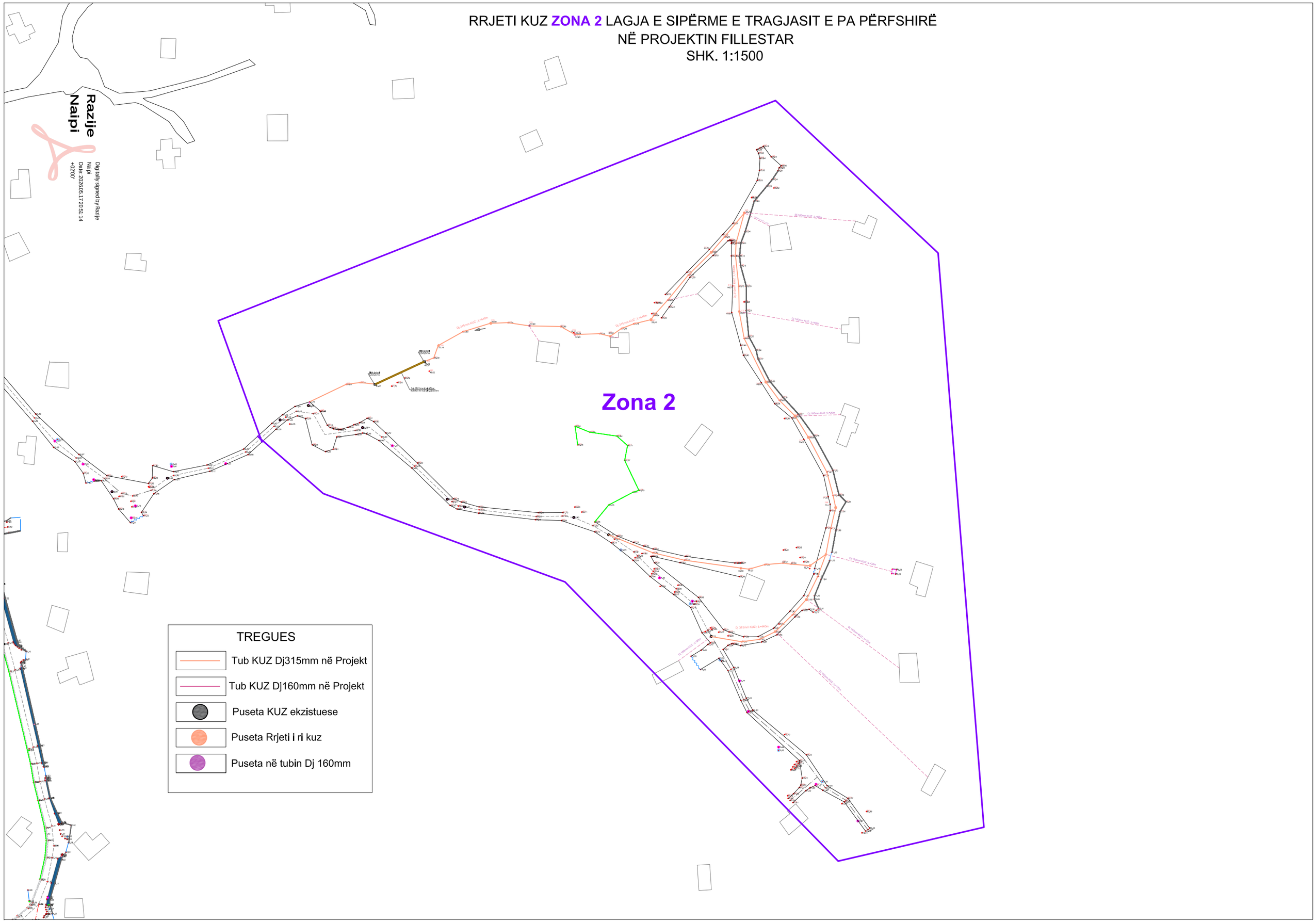

RRJETI KUZ **ZONA 2** LAGJA E SIPËRME E TRAGJASIT E PA PËRFSHIRË NË PROJEKTIN FILLESTAR

SHK. 1:500

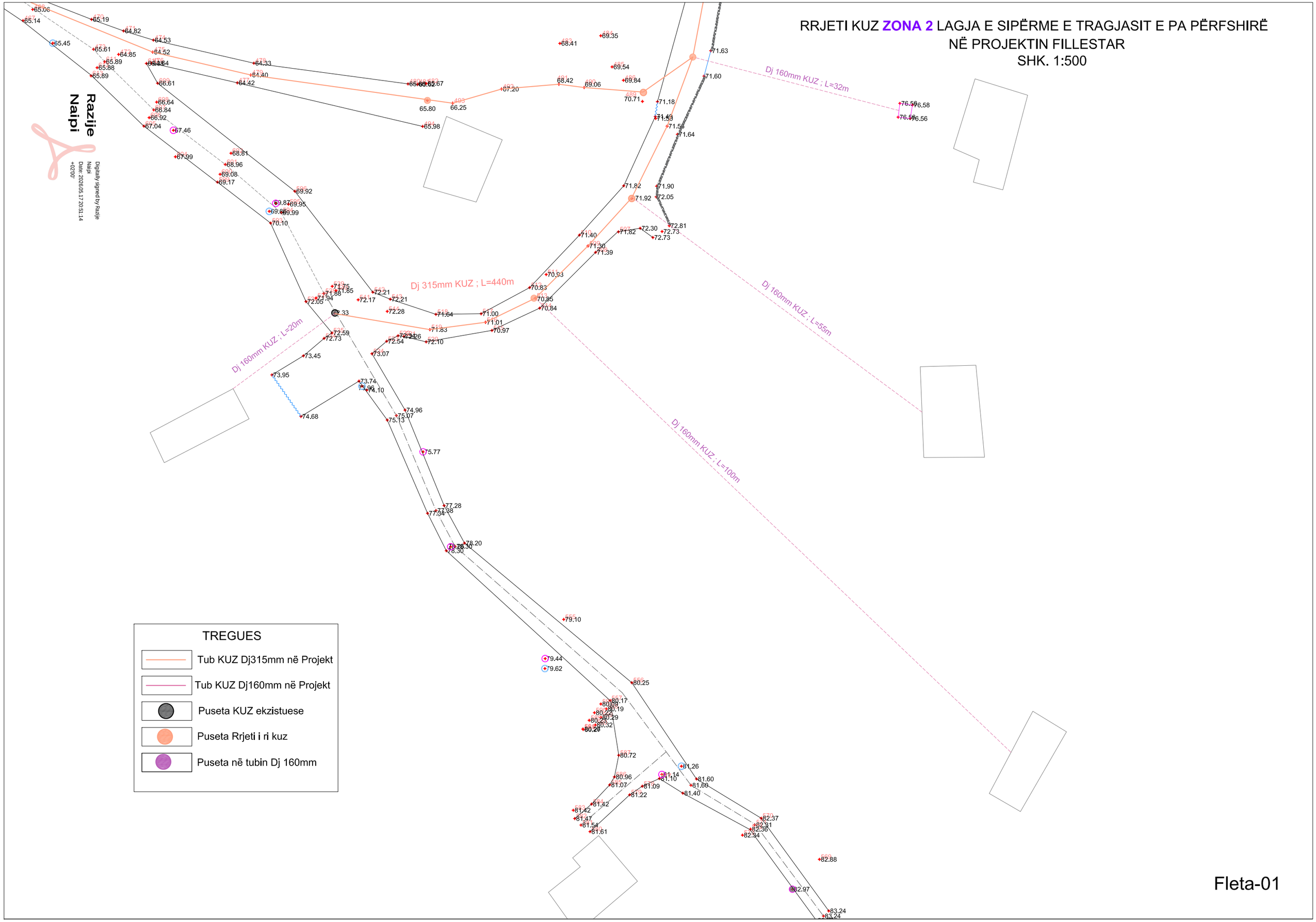

Fleta-01

RRJETI KUZ ZONA 2 LAGJA E SIPËRME E TRAGJASIT E PA PËRFSHIRË NË PROJEKTIN FILLESTAR

SHK. 1: 500

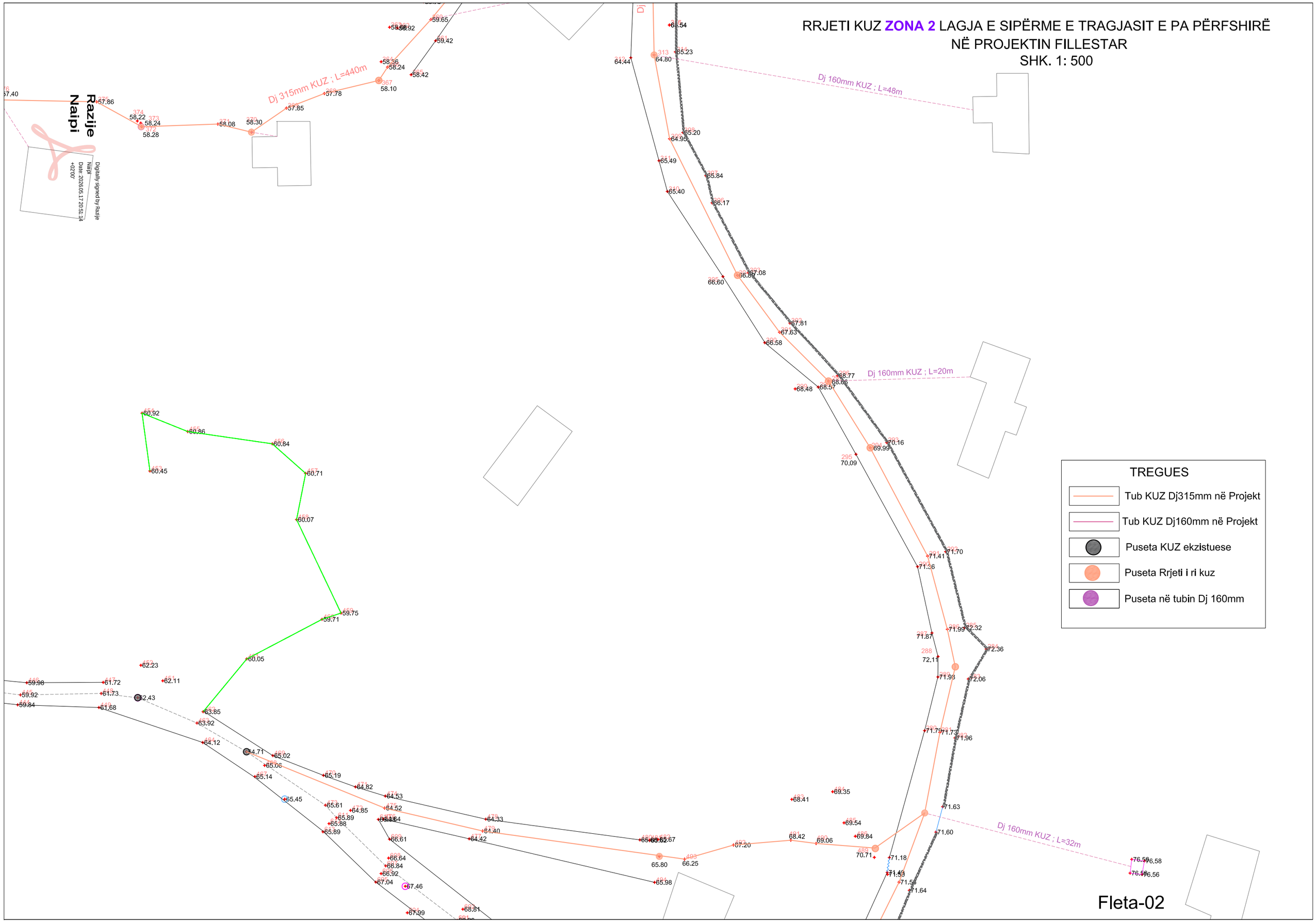

Fleta-02

RRJETI KUZ ZONA 2 LAGJA E SIPËRME E TRAGJASIT E PA PËRFSHIRË
NË PROJEKTIN FILLESTAR
SHK. 1:500

Razije Naipi

Digitally signed by Razije Naipi
Date: 2026.05.17 20:51:14 +02'00'

TREGUES

- Tub KUZ Dj315mm në Projekt
- Tub KUZ Dj160mm në Projekt
- Puseta KUZ ekzistuese
- Puseta Rrjeti i ri kuz
- Puseta në tubin Dj 160mm

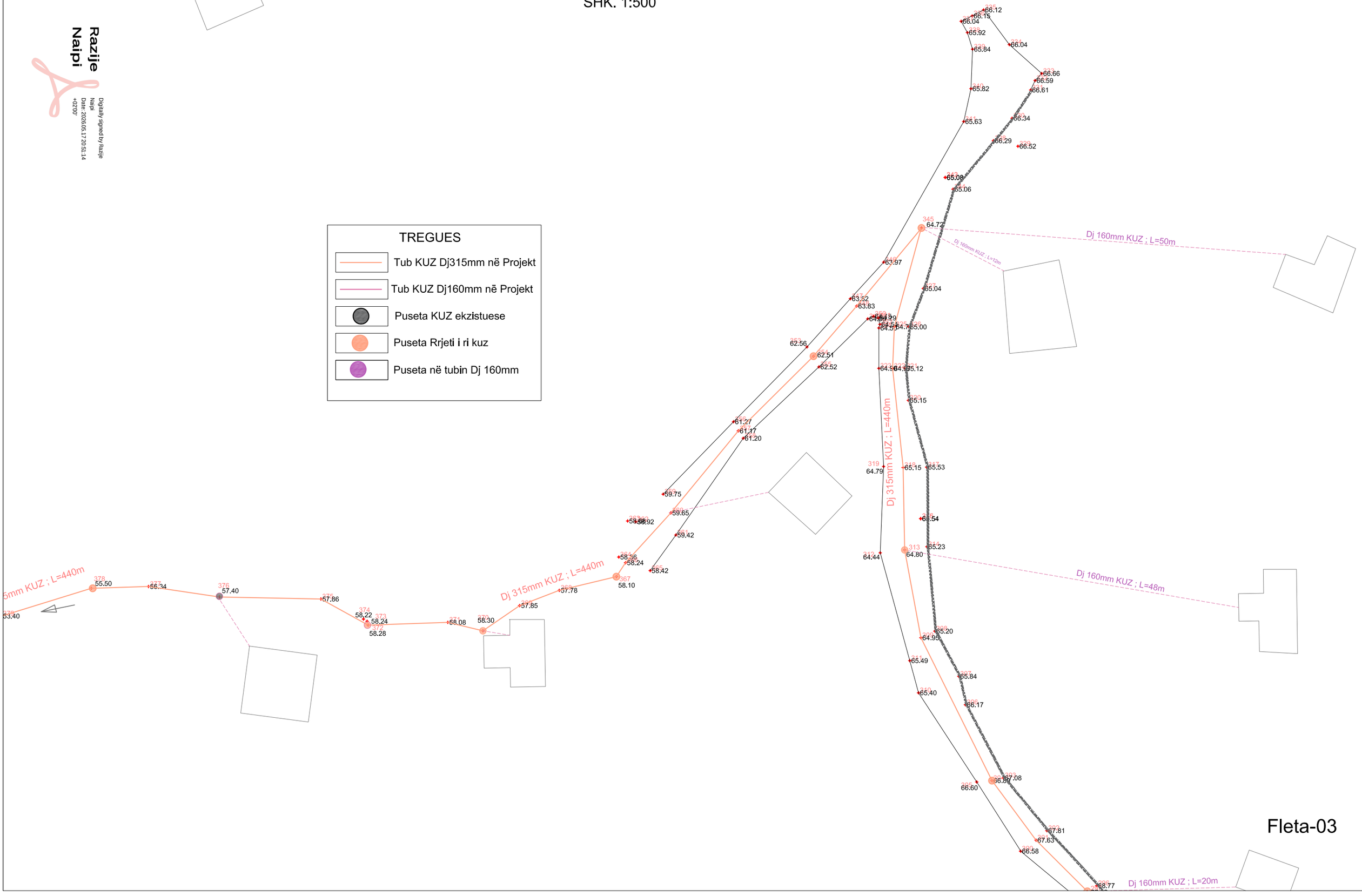

RRJETI KUZ ZONA 2 LAGJA E SIPËRME E TRAGJASIT E PA PËRFSHIRË
NË PROJEKTIN FILLESTAR
SHK. 1:500

Razije Naipi

Digitally signed by Razije Naipi
Date: 2026.05.17 20:51:14 +02'00'

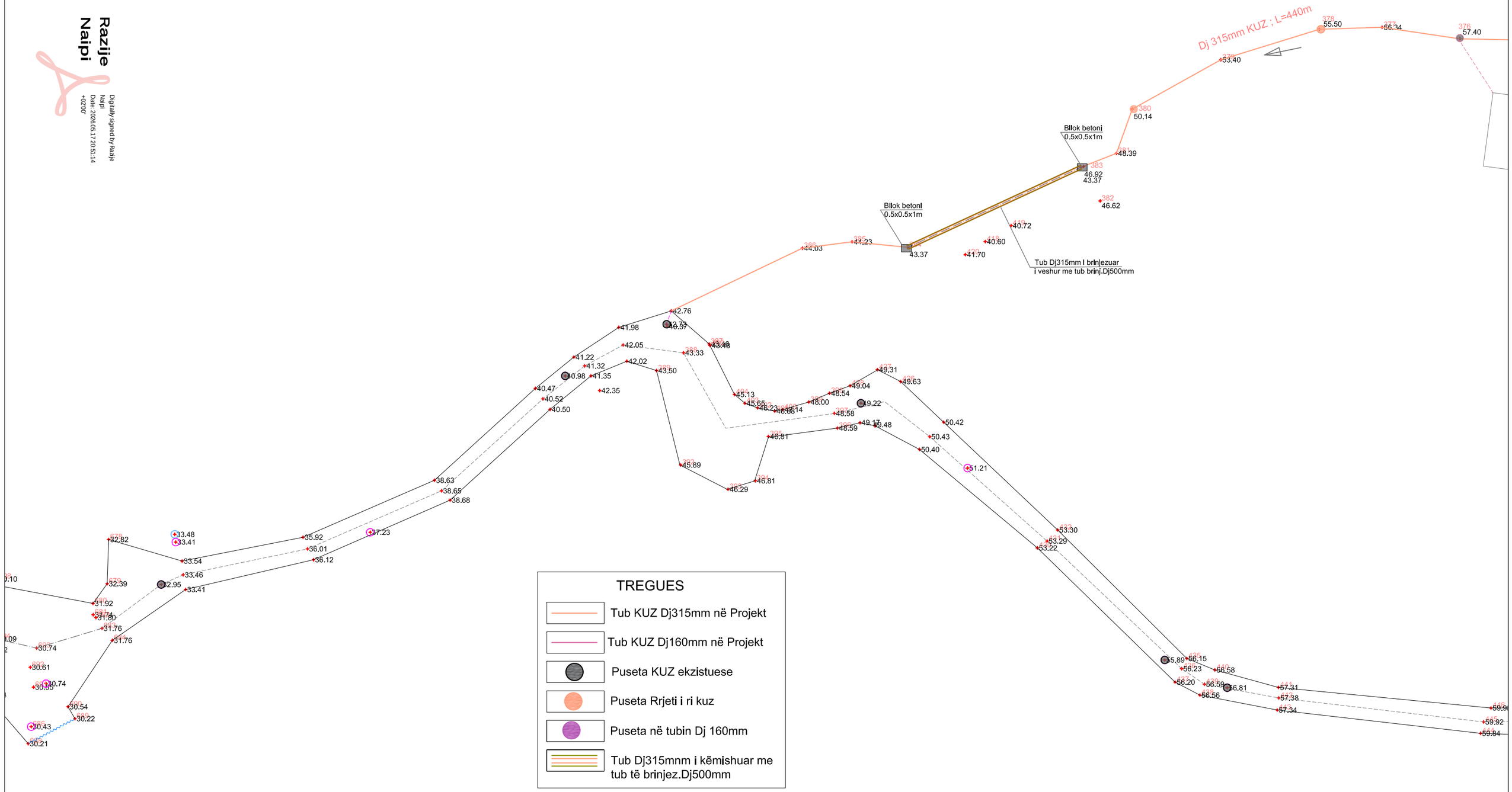

Fleta-04

RRJETI KUZ **ZONA 3** LAGJA MBI MAGAZINAT TRAGJAS E PA PËRFSHIRË NË PROJEKTIN FILLESTAR

SHK. 1:1000

Razije Naipi

Digitally signed by Razije Naipi
Date: 2026.05.17 20:51:14 +02'00'

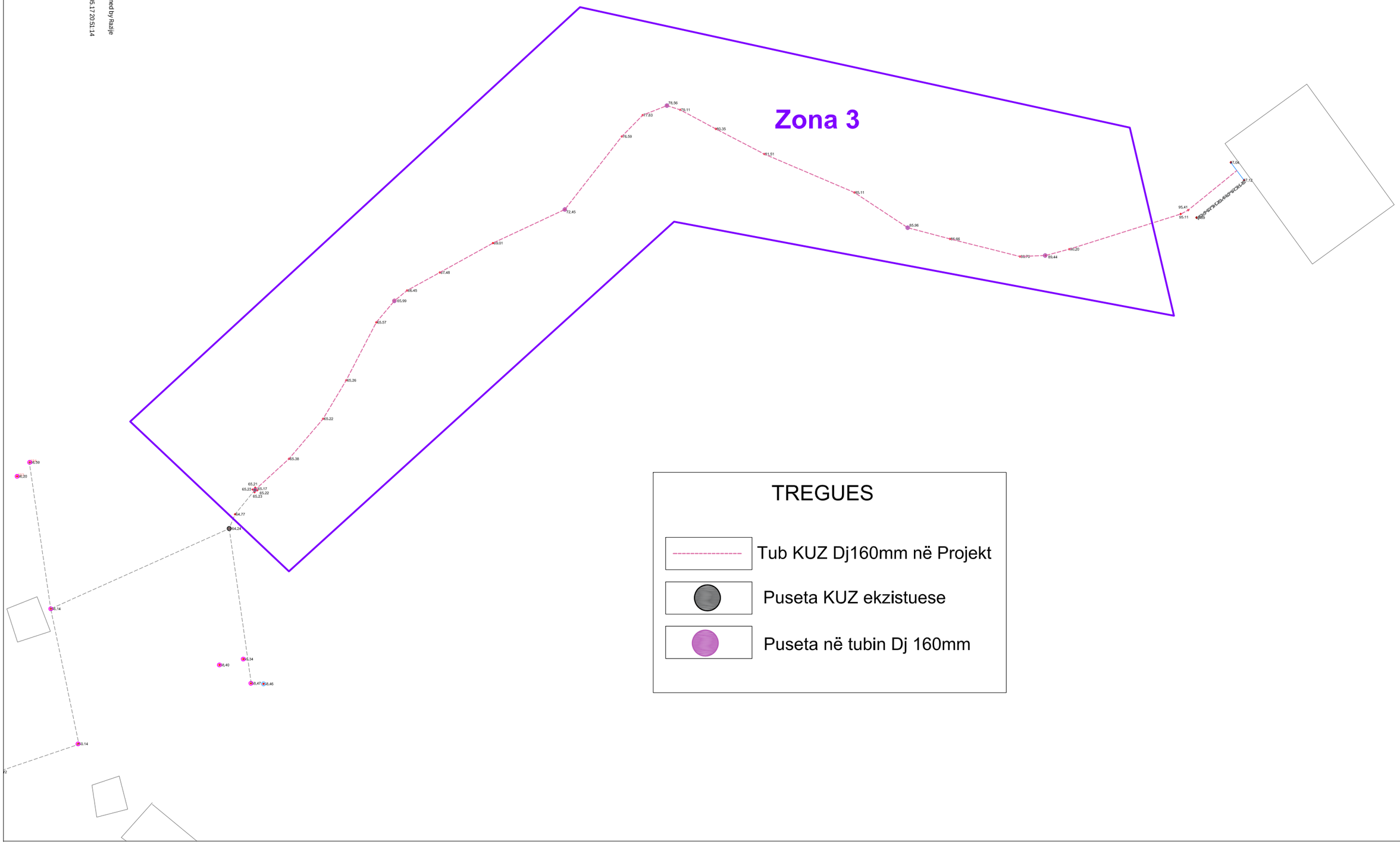

TREGUES

- Tub KUZ Dj160mm në Projekt
- Puseta KUZ ekzistuese
- Puseta në tubin Dj 160mm

RRJETI KUZ **ZONA 3** LAGJA MBI MAGAZINAT TRAGJAS E PA PËRFSHIRË
NË PROJEKTIN FILLESTAR
SHK. 1:500

Razije Naipi
Digitally signed by Razije Naipi
Date: 2026.05.17 20:51:14 +02'00'

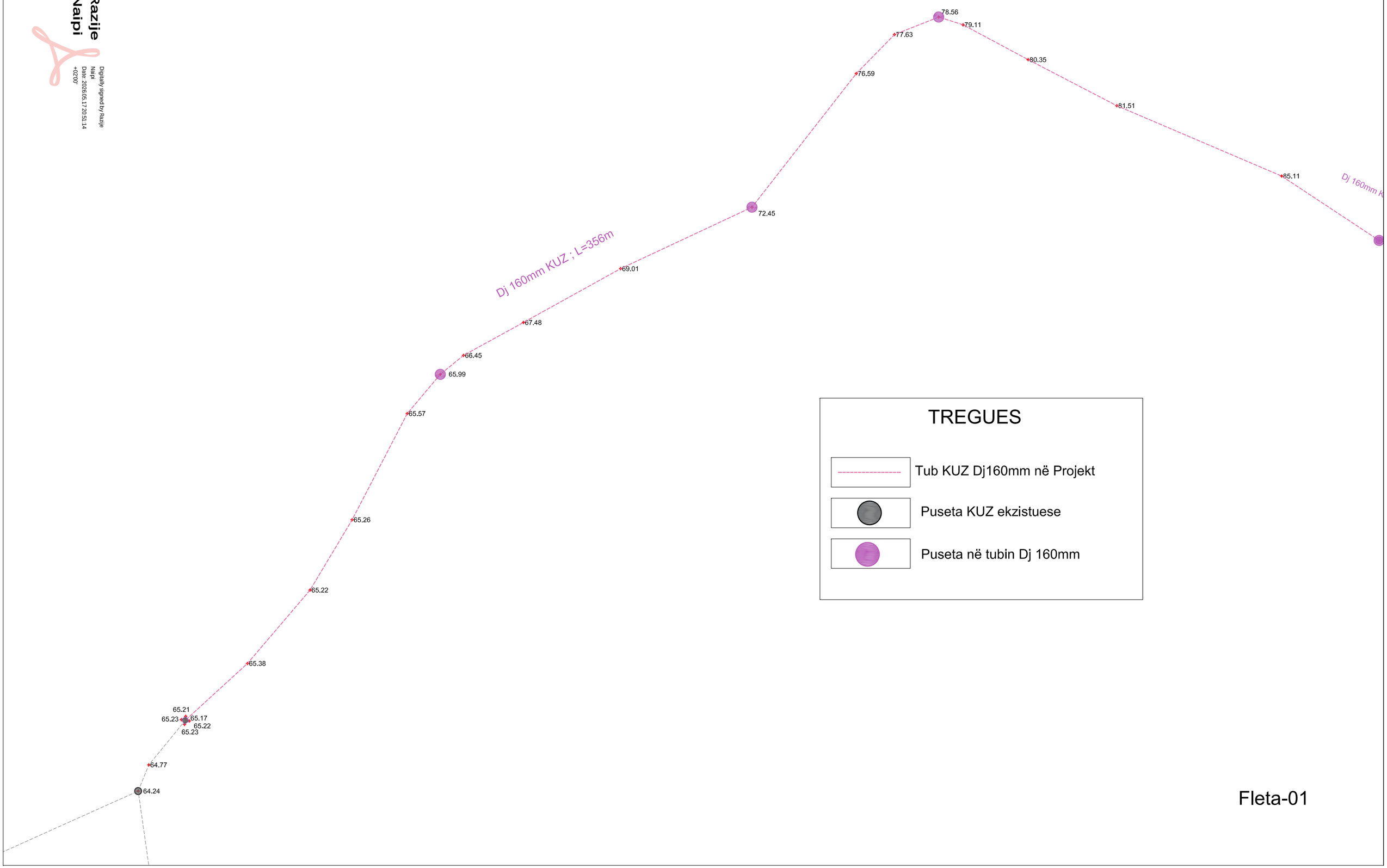

Fleta-01

RRJETI KUZ **ZONA 3** LAGJA MBI MAGAZINAT TRAGJAS E PA PËRFSHIRË
NË PROJEKTIN FILLESTAR
SHK. 1:500

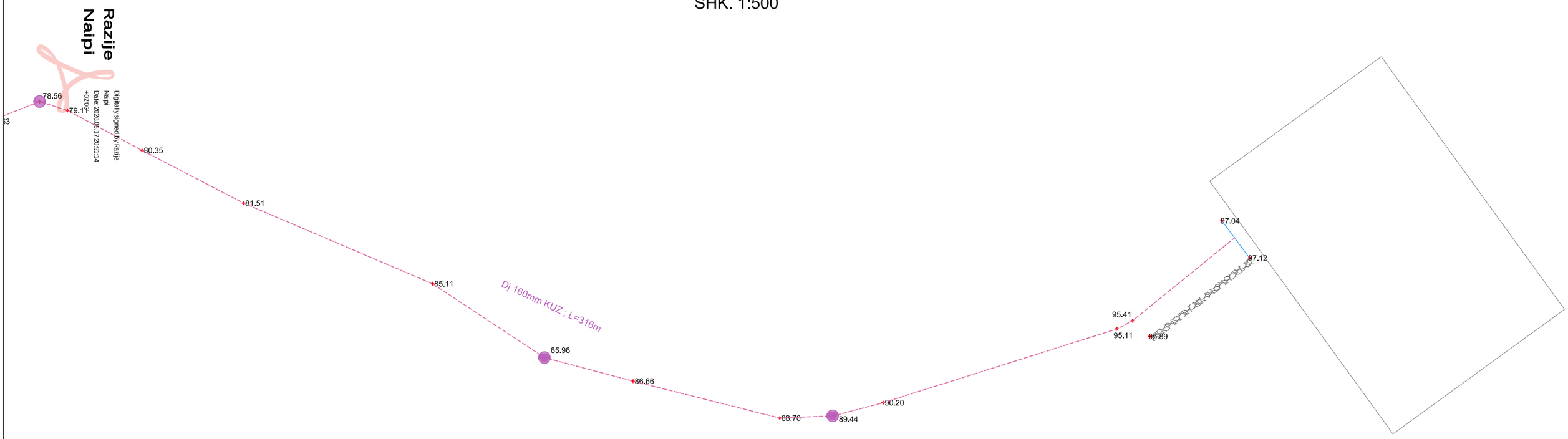

TREGUES

- Tub KUZ Dj160mm në Projekt
- Puseta KUZ ekzistuese
- Puseta në tubin Dj 160mm

Fleta-02

LIDHJA TIPIKE E LCC ME PUSETEN

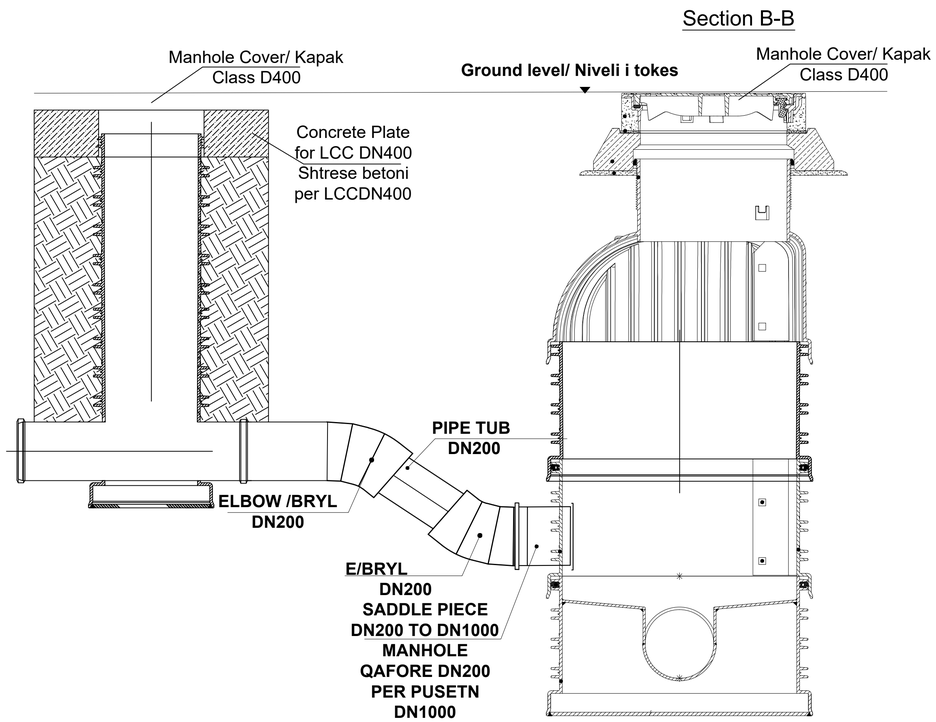

LIDHJA TIPIKE E LCC ME KOLEKTORIN KRYESOR

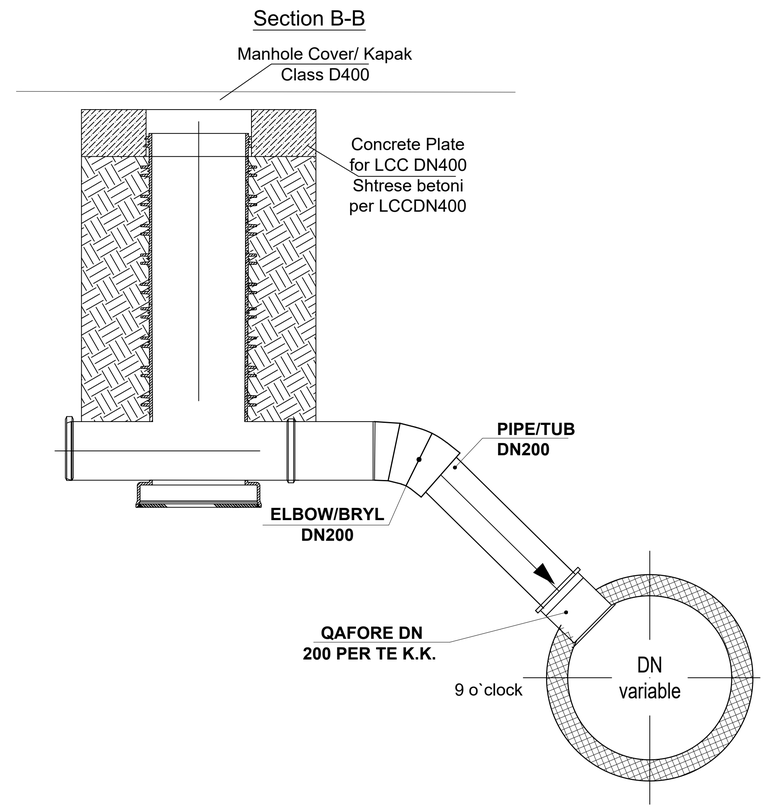

TIRANE 2026

TITULLI PROJEKTIT

RIVITALIZIM,VLERËSIM TEKNIK DHE HARTIM TE PREVENTIVIT

RRJETI KUZ FSHATI TRAGJAS

REAN 95
PROJEKTIM MBIKQYRJE KOLAUDIM

Ing.Razije Naipi

Ing.Naim BAÇI

PROJECT: Rural Water Supply 3 - BMZ ID 2011 66 370, 2020 61 133/ Ujesjellesi Rural 3 - BMZ ID 2011 66 370, 2020 61 133 PROJEKTI: CONSULTING SERVICES FOR PROJECT PREPARATION AND FINAL DESIGN FOR CONSTRUCTION/RECONSTRUCTION OF WATER SUPPLY SYSTEMS IN RURAL AREAS SHERBIME KONSULENCE PER PERGATITJEN E PROJEKTEVE DHE PROJEKT ZBATIMEVE PER NDERTIMIN/RINDERTIMIN E RRJETIT TE UJESJELLESIT NE ZONAT RURALE	CLIENT: KLIENTI: ALBANIAN DEVELOPMENT FUND FONDI SHQIPTAR I ZHVILLIMIT	ENGINEER: INXHINIER: CES Consulting Engineers Salzgitter GmbH			SCALE: SHKALLA: NTS
TITLE: TITULLI: TYPICAL LCC TO MANHOLE OR MAIN COLLECTOR LIDHJA TIPIKE LCC ME PUSETEN OSE ME K.K	FUNDING: FINANCUESI:	Sub - Consultant:	01	FINAL	NOVEMBER2018	DATE: APPROVAL DATE: NOVEMBER 2018
			00	DRAFT TO FINAL	AUGUST 2018	FILE NAME: EMRI DOK: RWSIII_024ORI_WW_TRA_HC.dwg
REVISION 00 / RISHIKIM 00			No. Rev	DESCRIPTION OF REVISION	DATE	DWG No.: Nr. VIZATIMIT: RWSIII_024ORI_WW_HC_003

SEKSIONI I GERMIMIT PER KANALIZIMET, TIPI 1,2 DHE 3

PREJRE TERTHORE TIP NE RRUGE ME ASFLAT

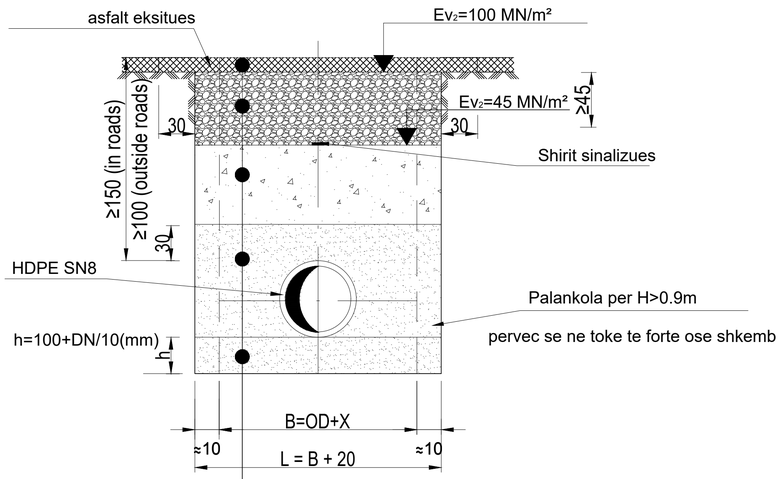

Shtrese asfalti dhe binder
Stabilizant Çakull/macadam 0/32, D_{pr}=100%

D_{pr} 97% in roads
D_{pr} 95% of roads
Material mbushes me shtrese te ngjeshur 25cm
D_{pr} 97% in roads
D_{pr} 95% of roads
≥
≥
≥

Pipe Surround with imported sand material acc. to specifications
maximum grain size 20mm
Mbushje rreth tubit me material te importuar me granulometri 20mm

Pipe Surround with imported sand material acc. to specifications
maximum grain size 20mm
Mbushje rreth tubit me material te importuar me granulometri 20mm

PREJRE TERTHORE TIP NE RRUGE PA ASFLAT

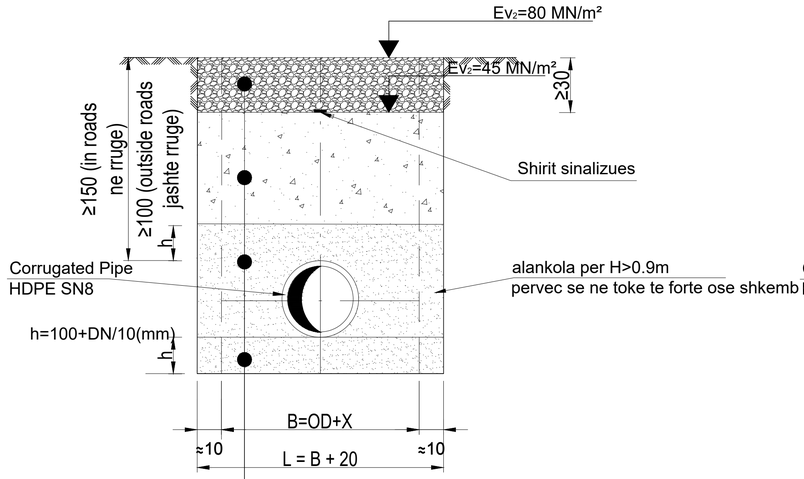

Frost-protective gravel/macadam
road base 0/32, D_{pr}=100%
Stabilizant Çakull/macadam 0/32, D_{pr}=100%
Suitable backfill material
backfilling to be done with
compacting in layer of 25cm
D_{pr}≥97% in roads
D_{pr}≥95% of roads
Material mbushes me shtrese te ngjeshur 25cm
D_{pr}≥97% in roads
D_{pr}≥95% of roads

Pipe Surround with imported sand material acc. to specifications
maximum grain size 20mm
Mbushje rreth tubit me material te importuar me granulometri 20mm

Pipe Surround with imported sand material acc. to specifications
maximum grain size 20mm
Mbushje rreth tubit me material te importuar me granulometri 20mm

PRERJE TERTHORE KANALI RRUGE ME BETON

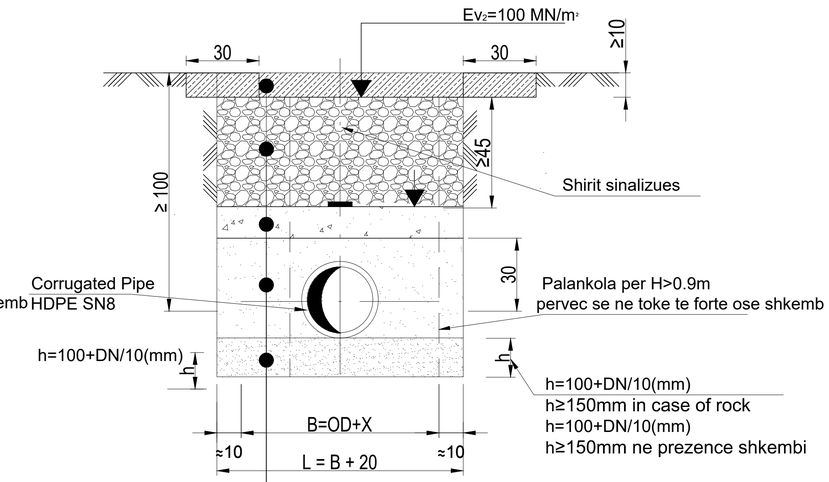

Siperfaqe betoni C20/25

Stabilizant Çakull/macadam 0/32, D_{pr}=100%

Material mbushes me shtrese te ngjeshur 25cm
D_{pr} 97% in roads
D_{pr} 95% of roads
≥
≥

Pipe Surround with imported sand material acc. to specifications
maximum grain size 20mm
Mbushje rreth tubit me material te importuar me granulometri 20mm

Pipe Surround with imported sand material acc. to specifications
maximum grain size 20mm
Mbushje rreth tubit me material te importuar me granulometri 20mm

Minimum trench width in relation to the normal pipe diameter DN (ID)	
DN (ID) (mm)	B (m) = OD+X for trench with shoring
200	0.8
250	0.8
315	0.9
400	1.2
OD-outside diameter of pipe, in m	

TIRANE 2026

TITULLI PROJEKTIT

RIVITALIZIM,VLERËSIM TEKNIK DHE HARTIM TE PREVENTIVIT

RRJETI KUZ FSHATI TRAGJAS

REAN 95
PROJEKTIM · MBIKQYRJE · KOLAUDIM

Ing.Razije Naipi
Ing.Naim BAÇI

PROJECT: PROJEKTI: Rural Water Supply 3 - BMZ ID 2011 66 370, 2020 61 133/ Ujesjellesi Rural 3 - BMZ ID 2011 66 370, 2020 61 133
CONSULTING SERVICES FOR PROJECT PREPARATION AND FINAL DESIGN FOR CONSTRUCTION/RECONSTRUCTION OF WATER SUPPLY SYSTEMS IN RURAL AREAS
SHERBIME KONSULENCE PER PERGATITJEN E PROJEKTEVE DHE PROJEKT ZBATIMEVE PER NDERTIMIN/RINDERTIMIN E RRJETIT TE UJESJELLESIT NE ZONAT RURALE

TITLE: TITULLI: CROSS SECTION WASTE WATER TYPE 1 AND 2
SEKSIONI I GERMIMIT PER KANALIZIMET, TIPI 1 DHE 2

CLIENT: KLIENTI: ALBANIAN DEVELOPMENT FUND
FONDI SHQIPTAR I ZHVILLIMIT

FUNDING: FINANCUESI: bashkëpunimi gjerman DEUTSCHE ZUSAMMENARBEIT KFW

ENGINEER: INXHINIER: CES Consulting Engineers Salzgitter GmbH

Sub - Consultant: STANDARD ENGINEERING STUDIO

No. Rev	DESCRIPTION OF REVISION	DATE
01	FINAL	NOVEMBER2018
00	DRAFT TO FINAL	AUGUST 2018

SCALE: SHKALLA: 1 : 25
DATE: NOVEMBER 2018
APPROVAL DATE:
FILE NAME: EMRI DOK: RWSIII_024ORI_WW_TRA_PTR.dwg
DWG No.: Nr. VIZATIMIT: RWSIII_024ORI_WW_TRA_TYP_001

SEKSIONI I GERMIMIT PER KANALIZIMET, TIPI 1,2 DHE 3

PREJRE TERTHORE TIP NE RRUGE ME ASFLAT

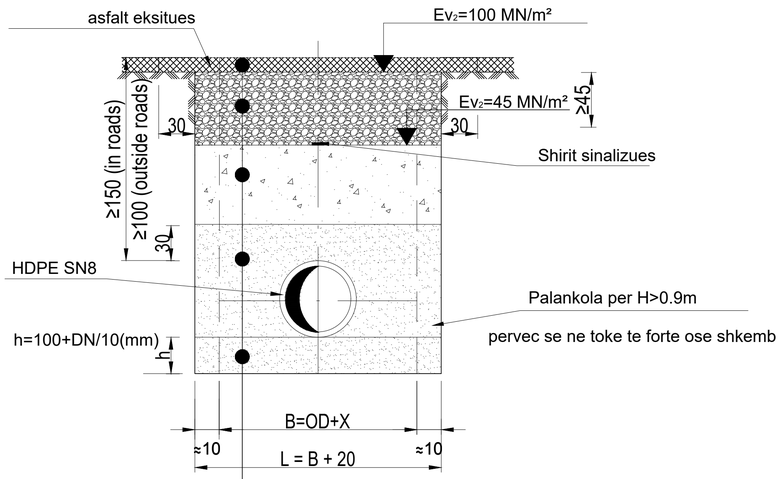

Shtrese asfalti dhe binder
Stabilizant Çakull/macadam 0/32, D_{pr}=100%

D_{pr} 97% in roads
D_{pr} 95% of roads
Material mbushes me shtrese te ngjeshur 25cm
D_{pr} 97% in roads
D_{pr} 95% of roads
≥
≥
≥

Pipe Surround with imported sand material acc. to specifications
maximum grain size 20mm
Mbushje rreth tubit me material te importuar me granulometri 20mm

Pipe Surround with imported sand material acc. to specifications
maximum grain size 20mm
Mbushje rreth tubit me material te importuar me granulometri 20mm

PREJRE TERTHORE TIP NE RRUGE PA ASFLAT

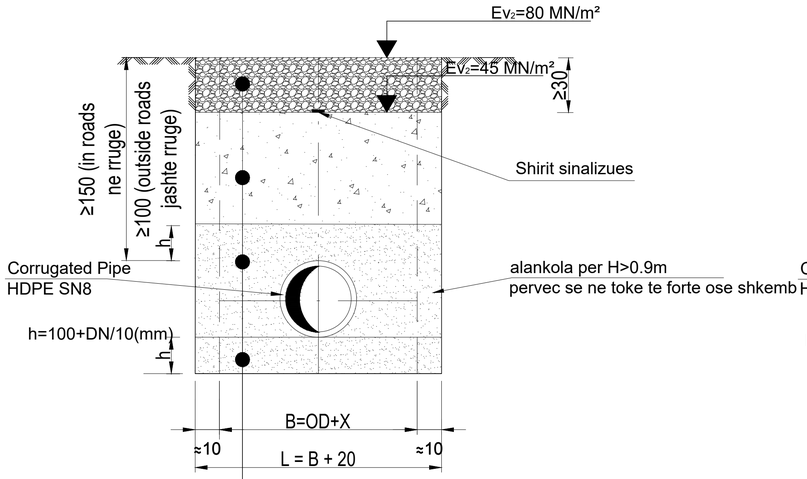

Frost-protective gravel/macadam
road base 0/32, D_{pr}=100%
Stabilizant Çakull/macadam 0/32, D_{pr}=100%
Suitable backfill material
backfilling to be done with
compacting in layer of 25cm
D_{pr}≥97% in roads
D_{pr}≥95% of roads
Material mbushes me shtrese te ngjeshur 25cm
D_{pr}≥97% in roads
D_{pr}≥95% of roads

Pipe Surround with imported sand material acc. to specifications
maximum grain size 20mm
Mbushje rreth tubit me material te importuar me granulometri 20mm

Pipe Surround with imported sand material acc. to specifications
maximum grain size 20mm
Mbushje rreth tubit me material te importuar me granulometri 20mm

PRERJE TERTHORE KANALI RRUGE ME BETON

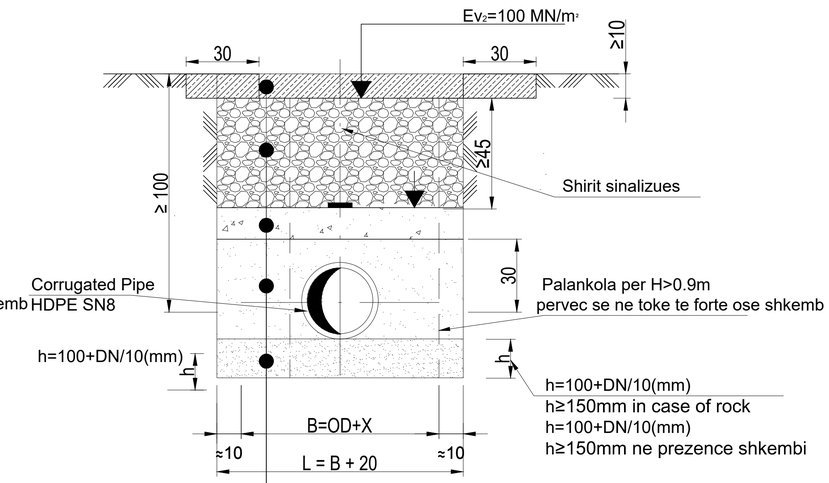

Siperfaqe betoni C20/25

Stabilizant Çakull/macadam 0/32, D_{pr}=100%

Material mbushes me shtrese te ngjeshur 25cm
D_{pr} 97% in roads
D_{pr} 95% of roads
≥
≥

Pipe Surround with imported sand material acc. to specifications
maximum grain size 20mm
Mbushje rreth tubit me material te importuar me granulometri 20mm

Pipe Surround with imported sand material acc. to specifications
maximum grain size 20mm
Mbushje rreth tubit me material te importuar me granulometri 20mm

Minimum trench width in relation to the normal pipe diameter DN (ID)	
DN (ID) (mm)	B (m) = OD+X for trench with shoring
200	0.8
250	0.8
315	0.9
400	1.2
OD-outside diameter of pipe, in m	

TIRANE 2026

TITULLI PROJEKTIT

RIVITALIZIM,VLERËSIM TEKNIK DHE HARTIM TE PREVENTIVIT

RRJETI KUZ FSHATI TRAGJAS

REAN 95
PROJEKTIM · MBIKQYRJE · KOLAUDIM

Ing.Razije Naipi
Ing.Naim BAÇI

PROJECT: PROJEKTI: Rural Water Supply 3 - BMZ ID 2011 66 370, 2020 61 133/ Ujesjellesi Rural 3 - BMZ ID 2011 66 370, 2020 61 133
CONSULTING SERVICES FOR PROJECT PREPARATION AND FINAL DESIGN FOR CONSTRUCTION/RECONSTRUCTION OF WATER SUPPLY SYSTEMS IN RURAL AREAS
SHERBIME KONSULENCE PER PERGATITJEN E PROJEKTEVE DHE PROJEKT ZBATIMEVE PER NDERTIMIN/RINDERTIMIN E RRJETIT TE UJESJELLESIT NE ZONAT RURALE

TITLE: TITULLI: CROSS SECTION WASTE WATER TYPE 1 AND 2
SEKSIONI I GERMIMIT PER KANALIZIMET, TIPI 1 DHE 2

CLIENT: KLIENTI: ALBANIAN DEVELOPMENT FUND
FONDI SHQIPTAR I ZHVILLIMIT

FUNDING: FINANCUESI: bashkëpunimi gjerman DEUTSCHE ZUSAMMENARBEIT KFW

ENGINEER: INXHINIER: CES Consulting Engineers Salzgitter GmbH

Sub - Consultant: STANDARD ENGINEERING STUDIO

No. Rev	DESCRIPTION OF REVISION	DATE
01	FINAL	NOVEMBER2018
00	DRAFT TO FINAL	AUGUST 2018

SCALE: SHKALLA: 1 : 25
DATE: NOVEMBER 2018
APPROVAL DATE:
FILE NAME: EMRI DOK: RWSIII_024ORI_WW_TRA_PTR.dwg
DWG No.: Nr. VIZATIMIT: RWSIII_024ORI_WW_TRA_TYP_001

PLAN OF STREAM CROSSING
PLANIMETRIA KALIM PERROI

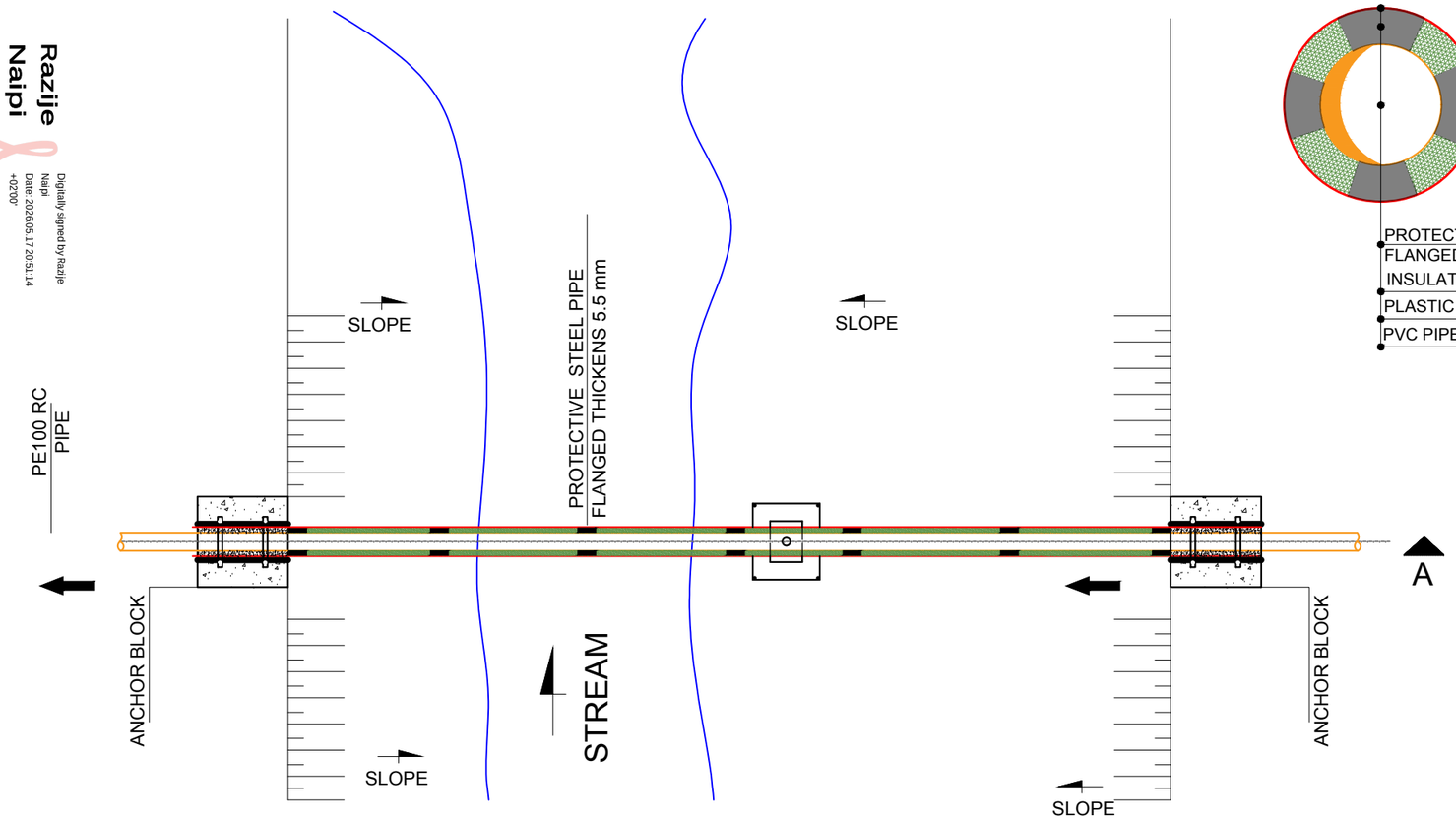

SECTION 3-3

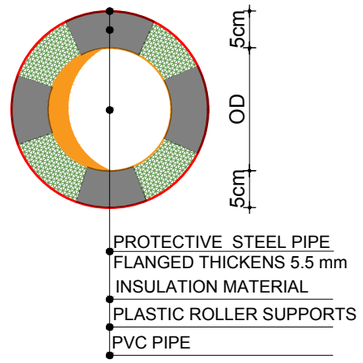

SECTION 2-2
SC: 1:50

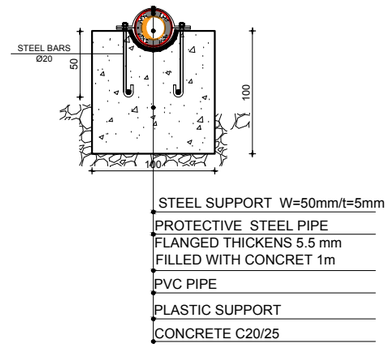

PLAN OF ANCHOR BLOCK
SC: 1:50

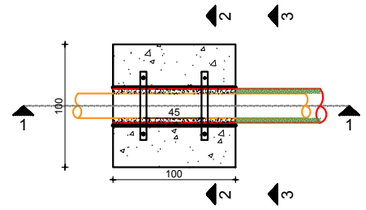

SECTION 1-1
SC: 1:50

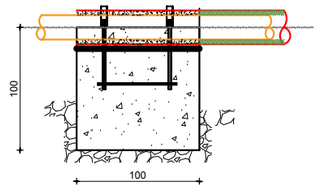

DETAIL "B"

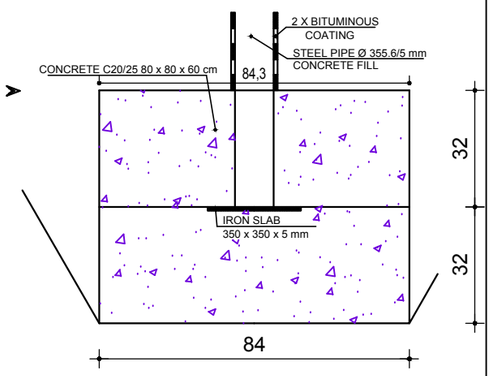

SECTION A-A OF STREAM CROSSING
PRERJA A-A KALIM PERROI

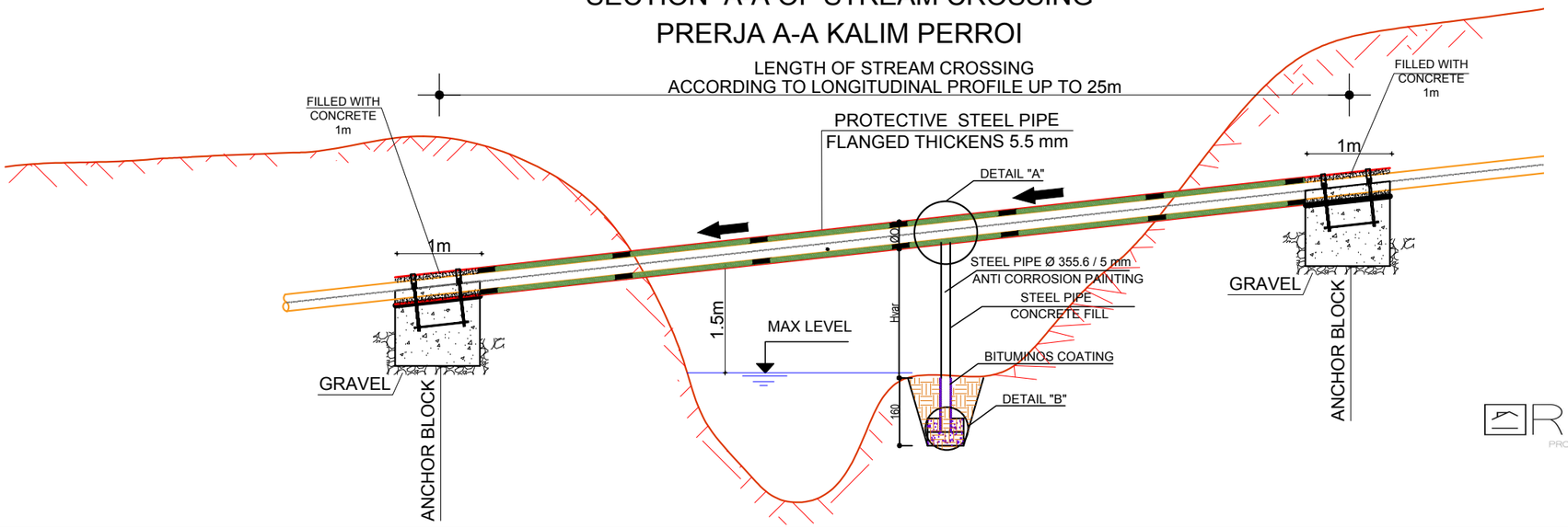

DETAIL "A"

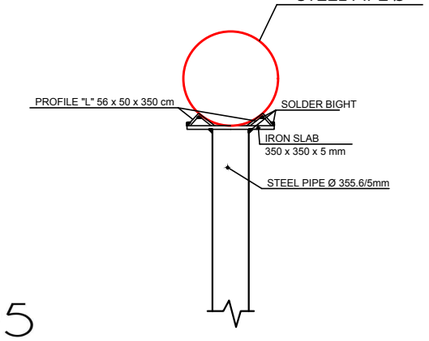

Razije Naipi
Digitally signed by Razije Naipi
Date: 2026.05.17 20:51:14 +02'00'

REAN 95
PROJEKTIM MBIKQYRJE KOLAUDIM

PROJECT: Rural Water Supply 3 - BMZ ID 2011 66 370, 2020 61 133/ Ujesjellesi Rural 3 - BMZ ID 2011 66 370, 2020 61 133 PROJEKTI: CONSULTING SERVICES FOR PROJECT PREPARATION AND FINAL DESIGN FOR CONSTRUCTION/RECONSTRUCTION OF WATER SUPPLY SYSTEMS IN RURAL AREAS SHERBIME KONSULENCE PER PERGATITJEN E PROJEKTEVE DHE PROJEKT ZBATIMEVE PER NDERTIMIN/RINDERTIMIN E RRJETIT TE UJESJELLESIT NE ZONAT RURALE	CLIENT: KLIENTI: ALBANIAN DEVELOPMENT FUND FONDI SHQIPTAR I ZHVILLIMIT	ENGINEER: INXHINIER: CES Consulting Engineers Salzgitter GmbH Sub - Consultant:			SCALE: SHKALLA: NTS
TITLE: TITULLI: STREAM CROSSING KALIM PERROI TYPE	FUNDING: FINANCUESI: bashkëpunimi gjerman DEUTSCHE ZUSAMMENARBEIT KFW		01	FINAL	NOVEMBER2018	DATE: NOVEMBER 2018 APPROVAL DATE:
			00	DRAFT TO FINAL	AUGUST 2018	FILE NAME: EMRI DOK: RWSIII-024TRO-DWG-WW-SC.dwg
			No. Rev	DESCRIPTION OF REVISION	DATE	DWG No.: Nr. VIZATIMIT: RWSIII-024TRO-DWG-WW-SC

HOUSE CONNECTION TO LCC DN400 TYPE NO.1
LIDHJET FAMILJARE ME LCC DN400 TIP No.01

Section B-B

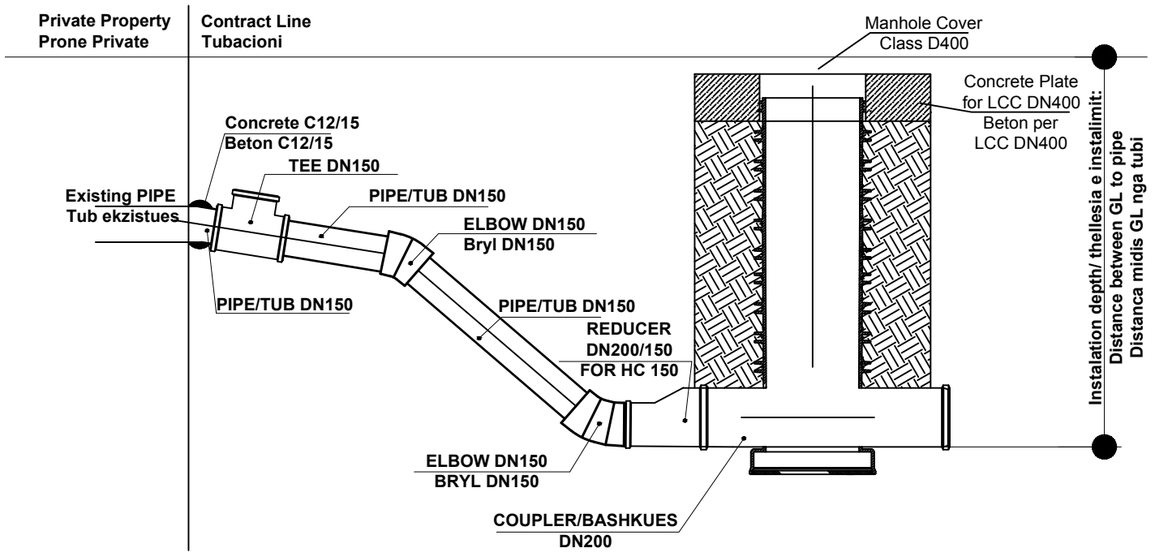

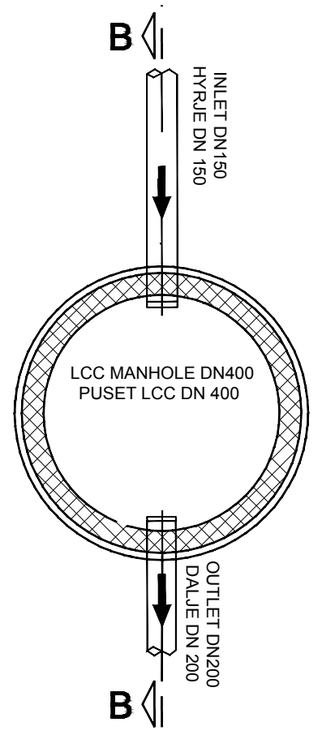

Single house connection - Plan Directly to the main collector
Planimetria e Lidhjeve familjare teke me kolektorin kryesor

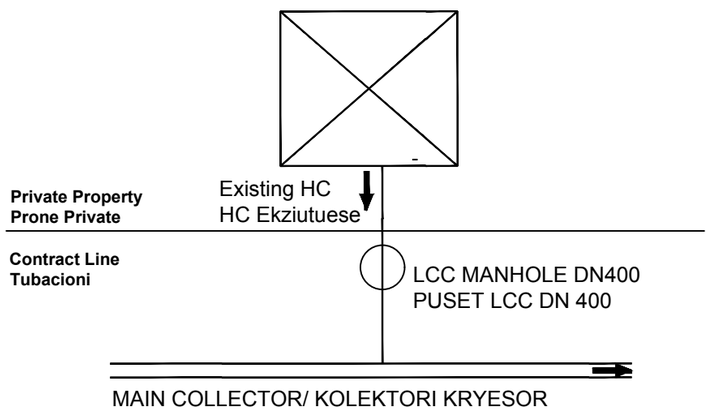

Single house connection - Plan Connection to MH
Planimetria e Lidhjeve familjare teke me puset

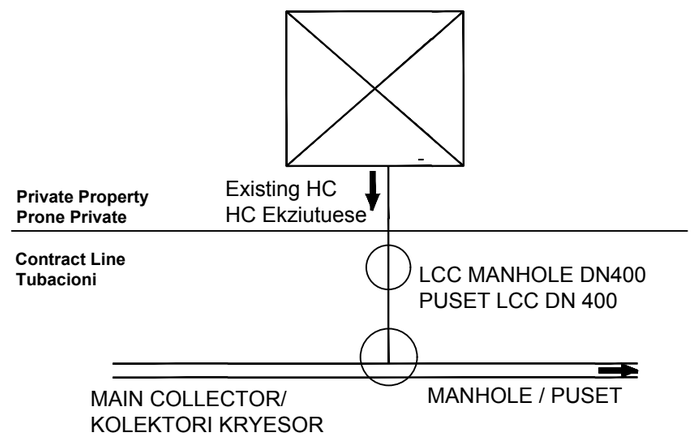

REAN 95
PROJEKTIM MBIKQYRJE KOLAUDIM

PROJECT: PROJEKTI: Rural Water Supply 3 - BMZ ID 2011 66 370, 2020 61 133/Ujesjellesi Rural 3 - BMZ ID 2011 66 370, 2020 61 133 CONSULTING SERVICES FOR PROJECT PREPARATION, AND FINAL DESIGN FOR CONSTRUCTION/RECONSTRUCTION OF WATER SUPPLY NETWORKS IN RURAL AREAS SHERBIME KONSULENCE PER PERGATITJEN E PROJEKTEVE DHE PROJEKT ZBATIMEVE PER NDERTIMIN/RINDERTIMIN E RRJETIT TE UJESJELLESIT NE ZONAT RURALE	CLIENT: KLIENTI: ALBANIAN DEVELOPMENT FUND FONDI SHQIPTAR I ZHVILLIMIT	ENGINEER: INXHINIER: CES Consulting Engineers Salzgitter GmbH Sub - Consultant:			SCALE: SHKALLA: NTS
TITLE: TITULLI: HOUSE CONNECTION TYPE No.1 TO LCC MANHOLE PUSETA E LIDHJEVE FAMILJARE TIPI No.1	FUNDING: FINANCUESI: bashkëpunimi gjerman DEUTSCHE ZUSAMMENARBEIT KFW		01	FINAL	NOVEMBER2018	DATE: NOVEMBER 2018 APPROVAL DATE:
			00	DRAFT TO FINAL	AUGUST 2018	FILE NAME: EMRI DOK: RWSIII_024ORI_WW_TRA_HC.dwg
			No. Rev	DESCRIPTION OF REVISION	DATE	DWG No.: Nr. VIZATIMIT: RWSIII_024ORI_WW_TRA_HC_001

Razije Naipi
Digitally signed by Razije Naipi
Date: 2020.05.17 20:51:14 +02'00'

HOUSE CONNECTION TO LCC DN400 TYPE NO.2
LIDHJET FAMILJARE ME LCC DN400 TIP No.02

Razije Naipi
Digitallly signed by Razije Naipi
Date: 2026.05.17 20:51:14 +02'00'

Section B-B

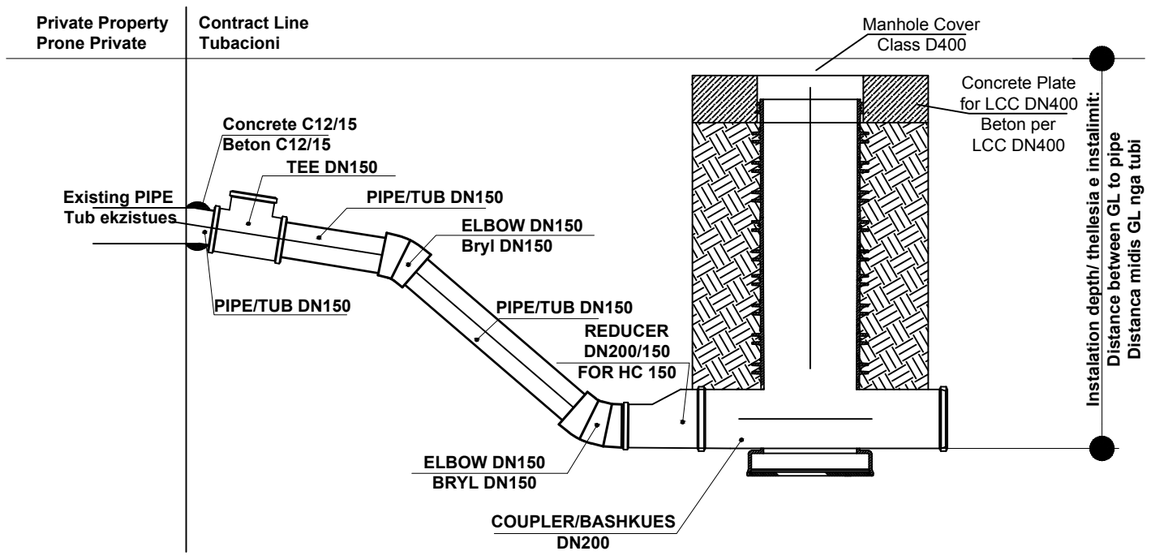

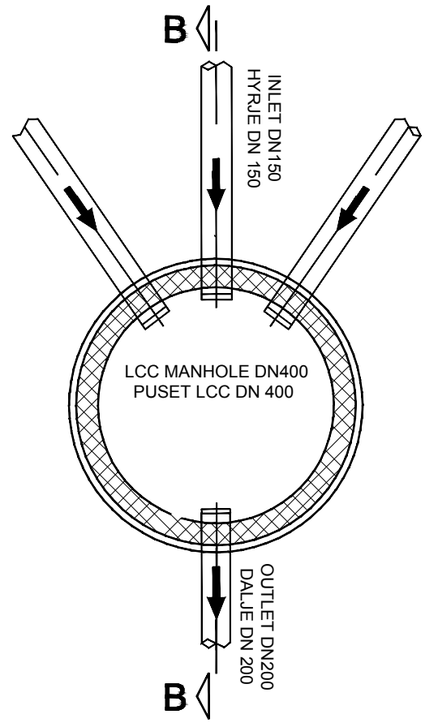

Multiple house connection - Plan Directly to the main collector
Planimetria e Lidhjeve te shumfishta me kolektorin kryesor

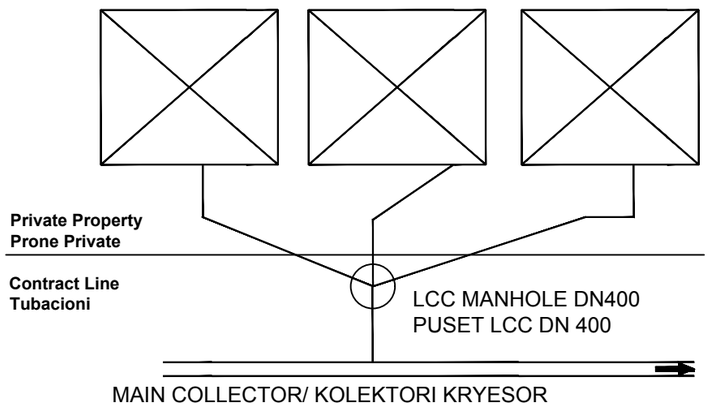

Multiple house connection - Plan Connection to MH
Planimetria e Lidhjeve te shumfishta me puset

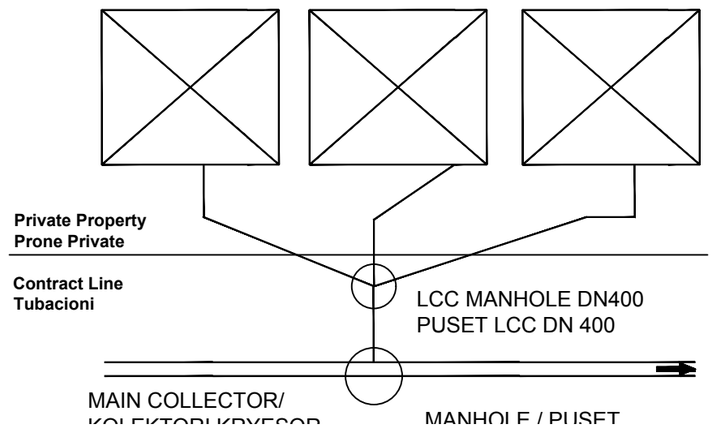

REAN 95
PROJEKTIM MBIKQYRJE KOLAUDIM

PROJECT: Rural Water Supply 3 - BMZ ID 2011 66 370, 2020 61 133/ Ujesjellesi Rural 3 - BMZ ID 2011 66 370, 2020 61 133 PROJEKTI: CONSULTING SERVICES FOR PROJECT PREPARATION AND FINAL DESIGN FOR CONSTRUCTION/RECONSTRUCTION OF WATER SUPPLY SYSTEMS IN RURAL AREAS SHERBIME KONSULENCE PER PERGATITJEN E PROJEKTEVE DHE PROJEKT ZBATIMEVE PER NDERTIMIN/RINDERTIMIN E RRJETIT TE UJESJELLESIT NE ZONAT RURALE	CLIENT: KLIENTI: ALBANIAN DEVELOPMENT FUND FONDI SHQIPTAR I ZHVILLIMIT	ENGINEER: INXHINIER: CES Consulting Engineers Salzgitter GmbH			SCALE: SHKALLA: NTS
TITLE: TITULLI: HOUSE CONNECTION TYPE No.2 TO LCC MANHOLE PUSETA E LIDHJEVE FAMILJARE TIPI No.2	FUNDING: FINANCUESI: KFW, bashkëpunimi gjerman DEUTSCHE ZUSAMMENARBEIT	Sub - Consultant:	01	FINAL	NOVEMBER2018	DATE: NOVEMBER 2018 APPROVAL DATE:
			00	DRAFT TO FINAL	AUGUST 2018	FILE NAME: EMRI DOK: RWSIII_024ORI_WW_TRA_HC.dwg
			No. Rev	DESCRIPTION OF REVISION	DATE	DWG No.: Nr. VIZATIMIT: RWSIII_024ORI_WW_TRA_HC_002

FOUNDATION PLAN LEVEL ±0.00, Sc. 1:50

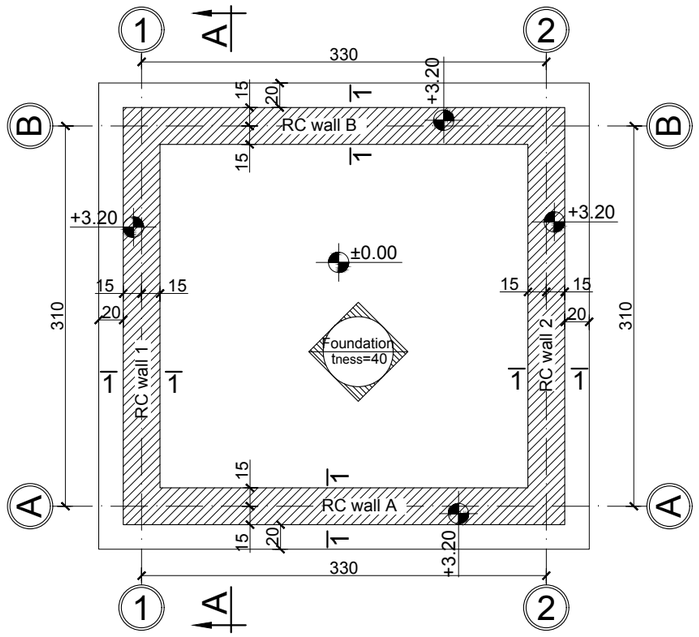

SECTION A-A, Sc. 1:50

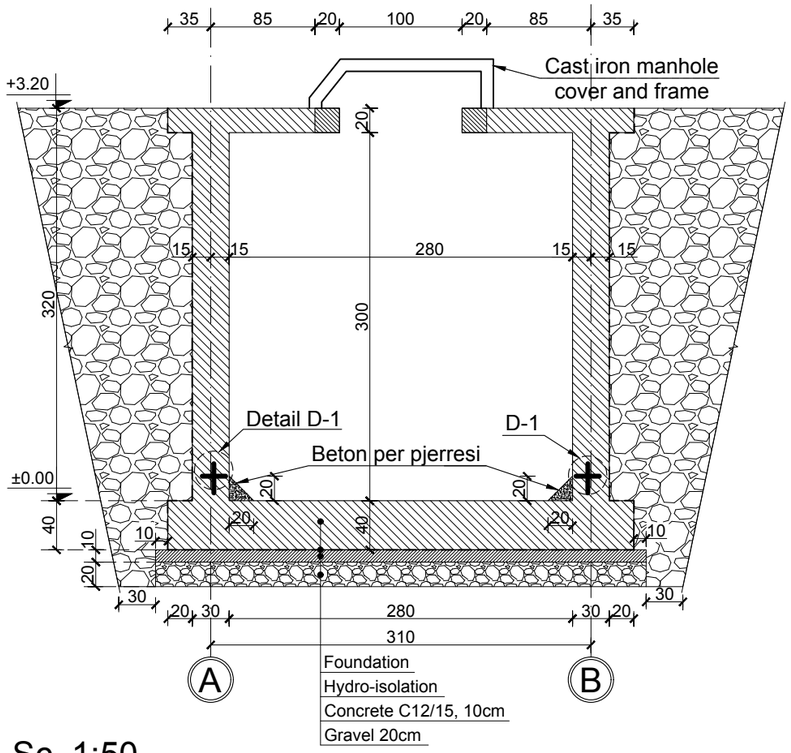

DETAIL D-1
Reinforcement for protection of waterstop, Sc.1:25

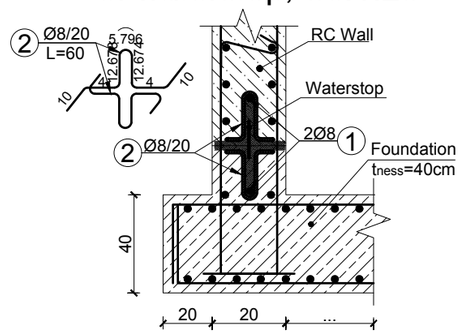

NOTE:
Refer to architectural project for Waterstop position.

RC wall 1 & 2 Sc. 1:50

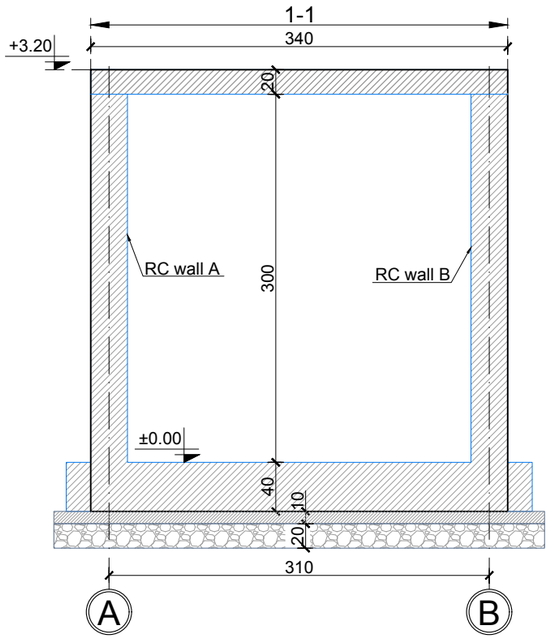

RC wall A & B Sc. 1:50

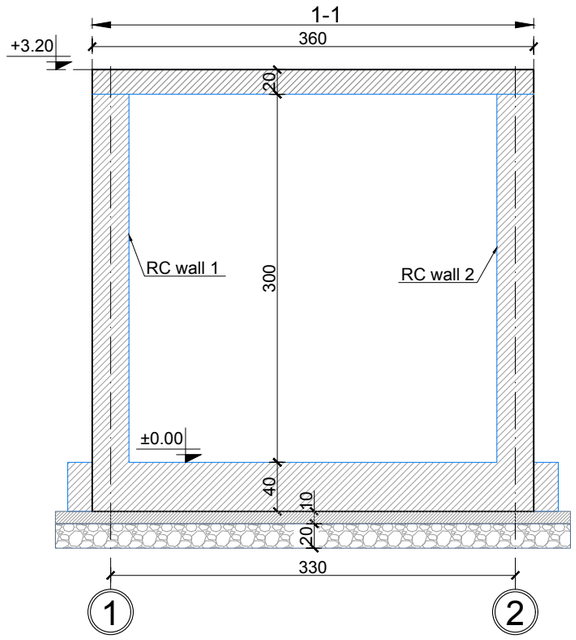

TABELA E SPECIFIKIMIT TE ARMATURES / TABLE OF REINFORCEMENT									
Lloji Type	Sasia Pieces	Poz. Element	d	l (cm)	cope quantity	L (m)	Pesha/nj weight/unit	Pesha / Weight	TOTALI/ TOTAL
D-1	1	1	8	1200	2	24.00	0.395	9.47	9.47
		2	8	60	128	76.80	0.395	30.30	30.30
									39.77

CONCRETE: C30/37
STEEL: S500
CONCRETE COVER: 4cm

REAN 95
PROJEKTIM MBIKQYRJE KOLAUDIM

Razije Naipi
Digitally signed by Razije Naipi
Date: 2026.05.17 20:51:14 +02'00'

PROJECT: Rural Water Supply 3 - BMZ ID 2011 66 370, 2020 61 133/ Ujesjellesi Rural 3 - BMZ ID 2011 66 370, 2020 61 133
PROJEKTI: CONSULTING SERVICES FOR PROJECT PREPARATION AND FINAL DESIGN FOR CONSTRUCTION/RECONSTRUCTION OF WATER SUPPLY SYSTEMS IN RURAL AREAS
SHERBIME KONSULENCE PER PERGATITJEN E PROJEKTEVE DHE PROJEKT ZBATIMEVE PER NDERTIMIN/RINDERTIMIN E RRJETIT TE UJESJELLESIT NE ZONAT RURALE

TITLE: TITULLI: **FOUNDATION PLAN, LEVEL ±0.00. RC WALLS VIEW**
PLANI I THEMELEVE, KUOTA ±0.00. PAMJET E MUREVE B/A

CLIENT: KLIENTI: ALBANIAN DEVELOPMENT FUND
FONDI SHQIPTAR I ZHVILLIMIT

FUNDING: FINANCUESI: bashkëpunimi gjerman DEUTSCHE ZUSAMMENARBEIT KFW

ENGINEER: INXHINIER: CES Consulting Engineers Salzgitter GmbH
Sub - Consultant: SE

No. Rev	DESCRIPTION OF REVISION	DATE
01	FINAL	NOVEMBER2018
00	DRAFT TO FINAL	AUGUST 2018

SCALE: SHKALLA: 1 : 1
DATE: NOVEMBER 2018
APPROVAL DATE:
FILE NAME: EMRI DOK: RWS-024ORI_WW_TPS_STR.dwg
DWG No. Nr. VIZATIMIT: RWSIII_024ORI_TPS_STR_003

FOUNDATION LOWER REINFORCEMENT
LEVEL ±0.00 , Sc. 1:50

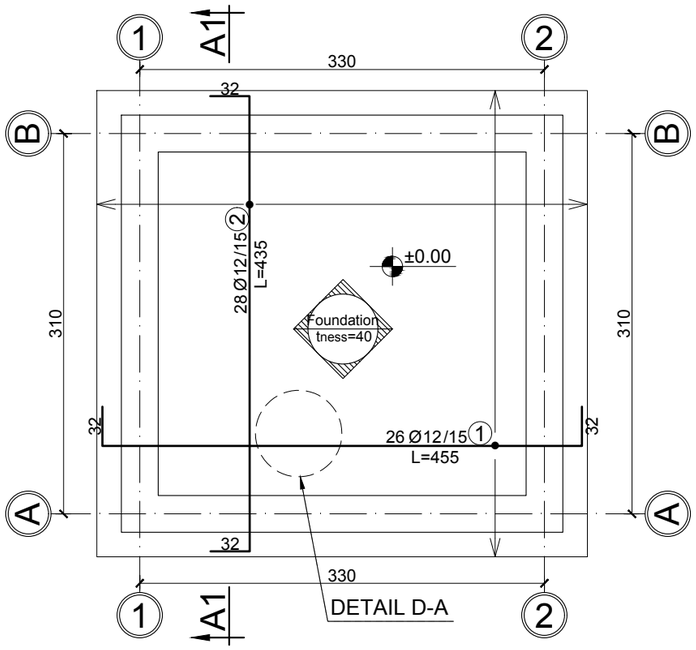

FOUNDATION UPPER REINFORCEMENT
LEVEL ±0.00, Sc. 1:50

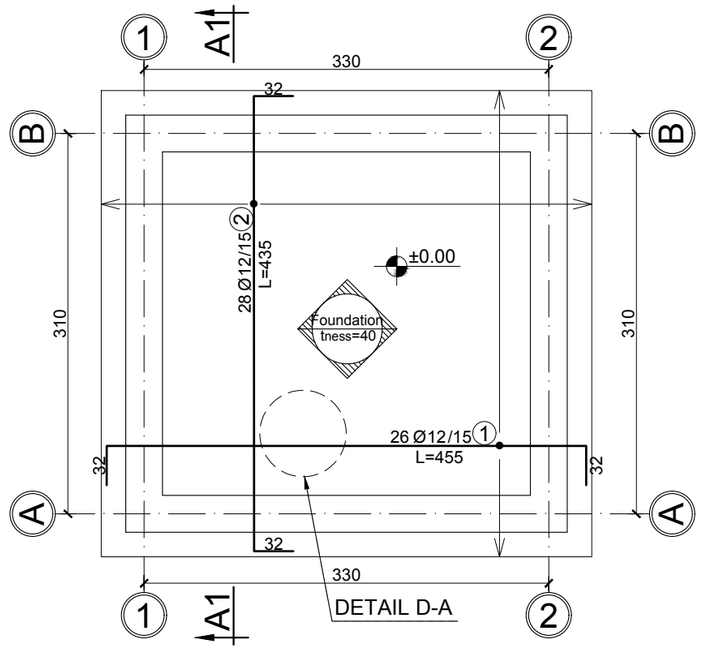

SECTION A1-A1, Sc. 1:50

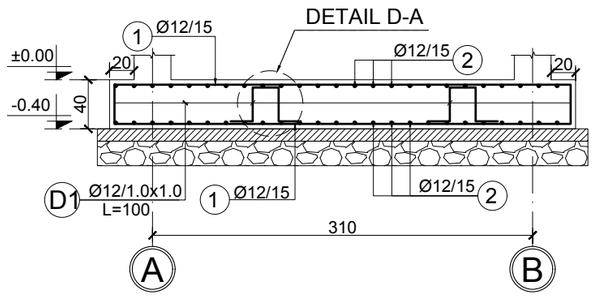

DETAIL D-A, Sc. 1:25

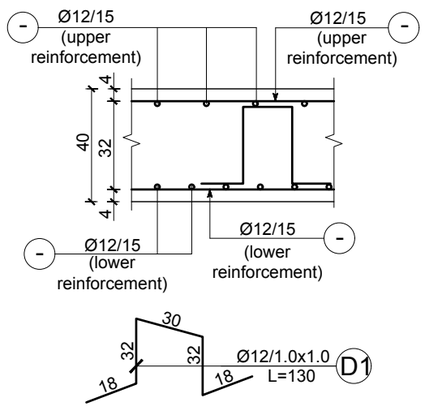

TABELA E SPECIFIKIMIT TE ARMATURES / TABLE OF REINFORCEMENT

Lloji Type	Sasia Pieces	Poz. Element	d	l (cm)	cope quantity	L (m)	Pesha/nj weight/unit	Pesha / Weight	TOTALI/ TOTAL
Pllaka e themelit / Foundation (zg. e poshtme / lower reinforcement)	1	1	12	455	26	118.3	0.888	105.03	105.3
		2	12	435	28	121.8	0.888	108.14	108.14
		D1	12	130	16	20.8	0.888	18.47	18.47
									231.63
Pllaka e themelit / Foundation (zg. e siperme / upper reinforcement)	1	1	12	455	26	118.3	0.888	105.03	105.03
		2	12	435	28	121.8	0.888	108.14	108.14
									213.16

REAN 95
PROJEKTIM MBIKQYRJE KOLAUDIM

CONCRETE: C30/37
STEEL: S500
CONCRETE COVER: a=4cm

Razije Naipi
Digitally signed by Razije Naipi
Date: 2026.05.17 20:51:14 +02'00'

PROJECT: Rural Water Supply 3 - BMZ ID 2011 66 370, 2020 61 133/ Ujesjellesi Rural 3 - BMZ ID 2011 66 370, 2020 61 133 PROJEKTI: CONSULTING SERVICES FOR PROJECT PREPARATION AND FINAL DESIGN FOR CONSTRUCTION/RECONSTRUCTION OF WATER SUPPLY SYSTEMS IN RURAL AREAS SHERBIME KONSULENCE PER PERGATITJEN E PROJEKTEVE DHE PROJEKT ZBATIMEVE PER NDERTIMIN/RINDERTIMIN E RRJETIT TE UJESJELLESIT NE ZONAT RURALE	CLIENT: KLIENTI: ALBANIAN DEVELOPMENT FUND FONDI SHQIPTAR I ZHVILLIMIT	ENGINEER: INXHINIER: CES Consulting Engineers Salzgitter GmbH Sub - Consultant:			SCALE: SHKALLA: 1 : 1
TITLE: TITULLI: **FOUNDATION REINFORCEMENT (lower and upper reinforcements)** **PLLAKA E THEMELIT (zgara e poshtme dhe e siperme)**	FUNDING: FINANCUESI: KFW		01	FINAL	NOVEMBER2018	DATE: NOVEMBER 2018 APPROVAL DATE:
			00	DRAFT TO FINAL	AUGUST 2018	FILE NAME: EMRI DOK: RWS-024ORI_WW_TPS_STR.dwg
			No. Rev	DESCRIPTION OF REVISION	DATE	DWG No.: Nr. VIZATIMIT: RWSIII_024ORI_TPS_STR_004

RC wall 1 & 2 Sc. 1:50

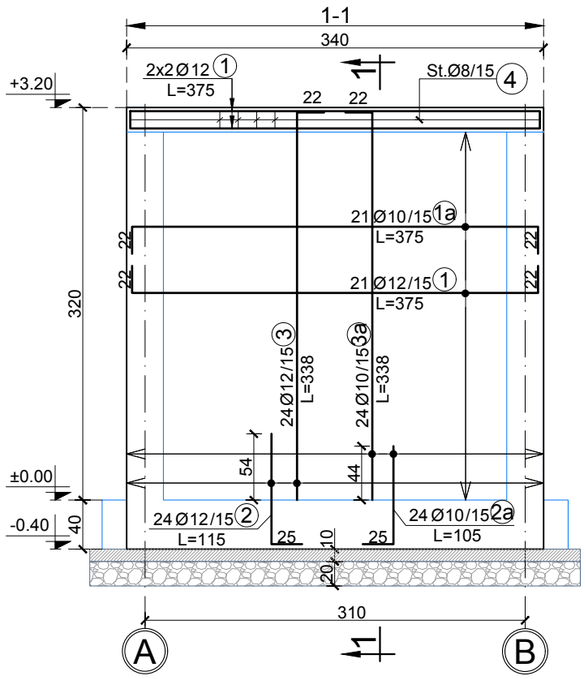

RC wall A & B Sc. 1:50

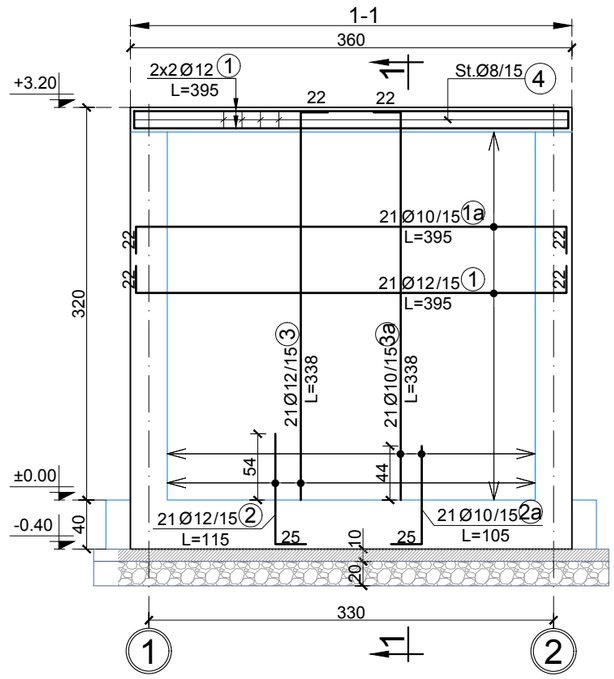

Section 1-1, Sc. 1:25

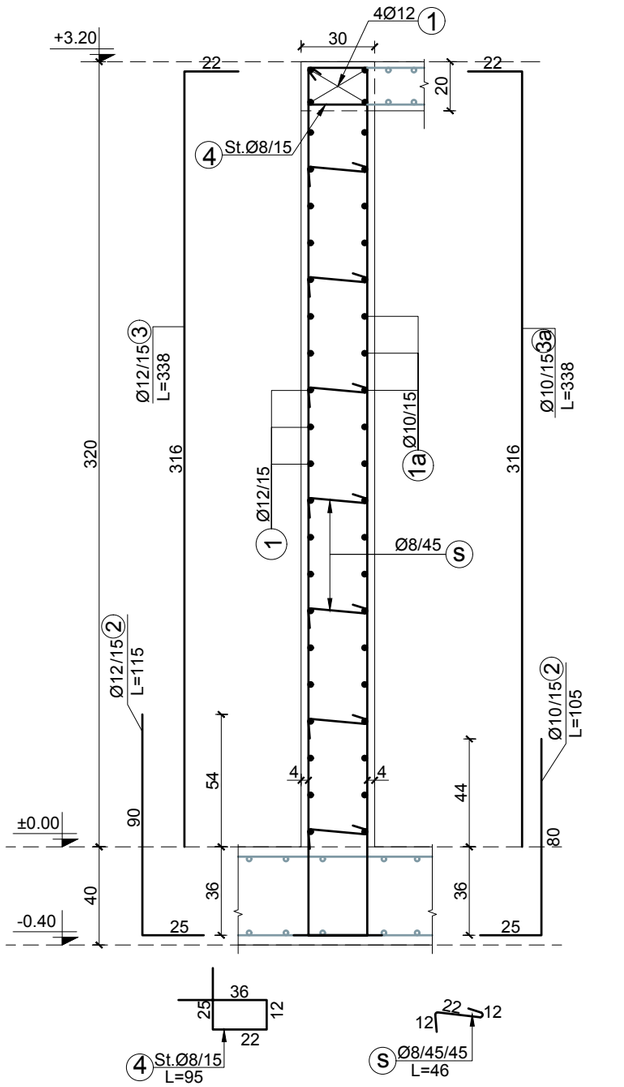

TABELA E SPECIFIKIMIT TE ARMATURES / TABLE OF REINFORCEMENT									
Lloji Type	Sasia Pieces	Poz. Element	d	l (cm)	cope quantity	L (m)	Pesha/nj weight/unit	Pesha / Weight	TOTALI/ TOTAL
RC wall 1 & 2	2	1	12	375	25	93.75	0.888	83.23	166.47
		1a	10	375	21	78.75	0.617	48.55	97.10
		2	12	115	24	27.60	0.888	24.50	49.01
		2a	10	105	24	25.20	0.617	15.54	31.07
		3	12	338	24	81.12	0.888	72.02	144.04
		3a	10	338	24	81.12	0.617	50.01	100.03
		4	8	95	24	22.80	0.395	9.00	17.99
		s	8	46	53	24.38	0.395	9.62	19.24
									624.95

TABELA E SPECIFIKIMIT TE ARMATURES / TABLE OF REINFORCEMENT									
Lloji Type	Sasia Pieces	Poz. Element	d	l (cm)	cope quantity	L (m)	Pesha/nj weight/unit	Pesha / Weight	TOTALI/ TOTAL
RC wall A & B	2	1	12	395	25	98.75	0.888	87.67	175.34
		1a	10	395	21	82.95	0.617	51.14	102.28
		2	12	115	21	24.15	0.888	21.44	42.88
		2a	10	105	21	22.05	0.617	13.59	27.19
		3	12	338	21	70.98	0.888	63.02	126.03
		3a	10	338	21	70.98	0.617	43.76	87.52
		4	8	95	21	19.95	0.395	7.87	15.74
		s	8	41	56	22.96	0.395	9.06	18.12
									595.12

CONCRETE: C30/37
STEEL: S500
CONCRETE COVER: a=4cm

REAN 95
PROJEKTIM MBIKQYRJE KOLAUDIM

Razije Naipi
Digitally signed by Razije Naipi Date: 2026.05.17 20:51:14 +02'00'

PROJECT: Rural Water Supply 3 - BMZ ID 2011 66 370, 2020 61 133/ Ujesjellesi Rural 3 - BMZ ID 2011 66 370, 2020 61 133
PROJEKTI: CONSULTING SERVICES FOR PROJECT PREPARATION AND FINAL DESIGN FOR CONSTRUCTION/RECONSTRUCTION OF WATER SUPPLY SYSTEMS IN RURAL AREAS
SHERBIME KONSULENCE PER PERGATITJEN E PROJEKTEVE DHE PROJEKT ZBATIMEVE PER NDERTIMIN/RINDERTIMIN E RRJETIT TE UJESJELLESIT NE ZONAT RURALE

TITLE: TITULLI: **RC WALL 1, 2, A AND B**
MURI B/A 1, 2, A DHE B

CLIENT: KLIENTI: ALBANIAN DEVELOPMENT FUND
FONDI SHQIPTAR I ZHVILLIMIT

FUNDING: FINANCUESI: bashkëpunimi gjerman DEUTSCHE ZUSAMMENARBEIT KFW

ENGINEER: INXHINIER: CES Consulting Engineers Salzgitter GmbH
Sub - Consultant: STANDARD ENGINEERING STUDIO

No. Rev	DESCRIPTION OF REVISION	DATE
01	FINAL	NOVEMBER2018
00	DRAFT TO FINAL	AUGUST 2018

SCALE: SHKALLA: 1 : 1
DATE: NOVEMBER 2018
APPROVAL DATE:
FILE NAME: EMRI DOK: RWS-024ORI_WW_TPS_STR.dwg
DWG No.: Nr. VIZATIMIT: RWSIII_024ORI_TPS_STR_005

STRUCTURAL PLAN LEVEL +3.20, Sc. 1:50

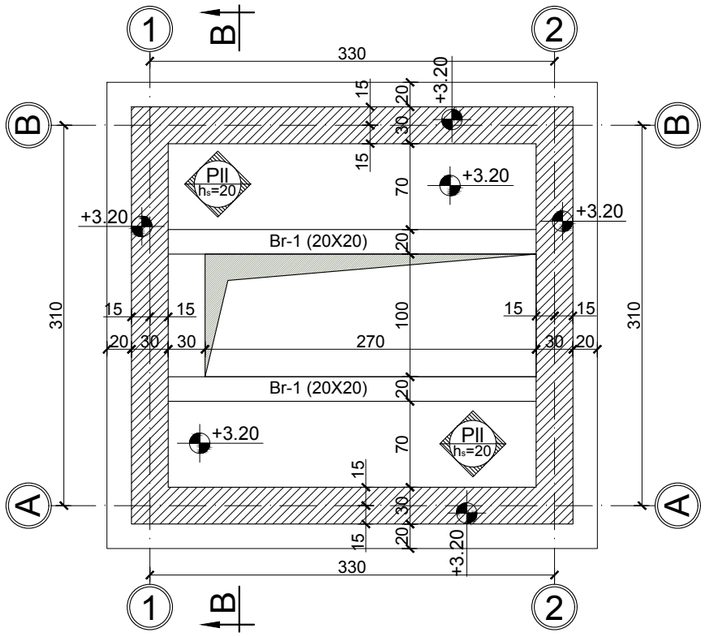

TYPICAL DETAIL OF OPENINGS (RECTANGULAR HOLE), Sc. 1:25

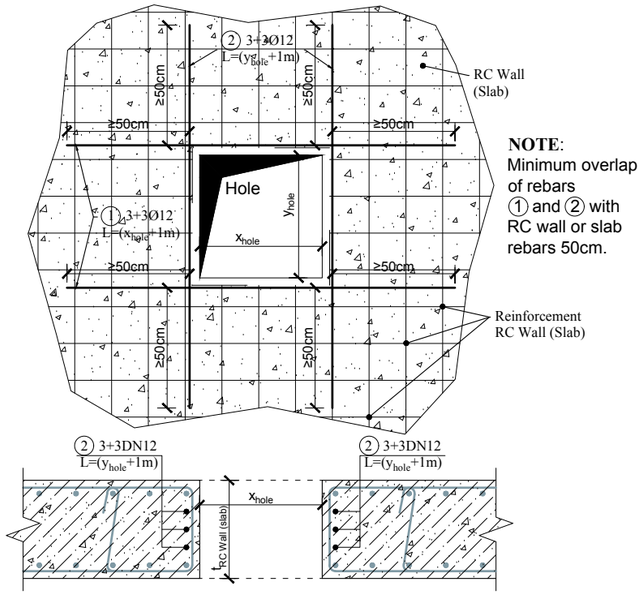

NOTE:
Minimum overlap of rebars ① and ② with RC wall or slab rebars 50cm.

TYPICAL DETAIL OF OPENINGS (CIRCULAR HOLE), Sc. 1:25

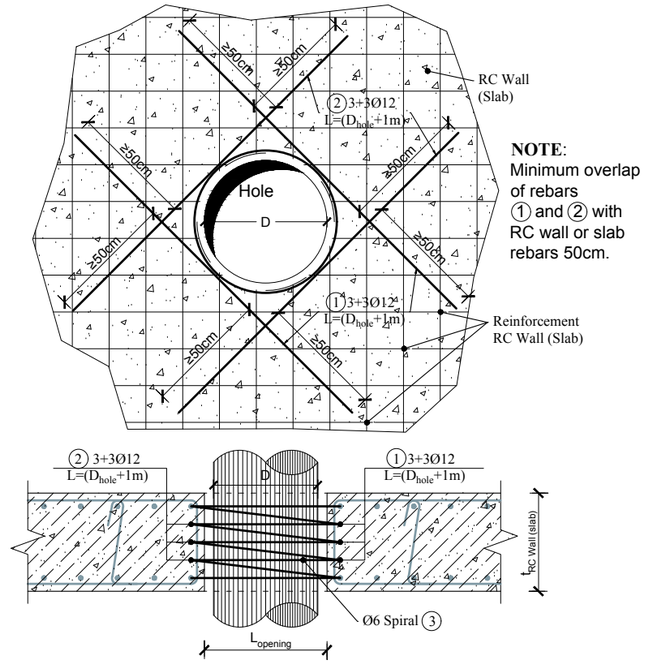

NOTE:
Minimum overlap of rebars ① and ② with RC wall or slab rebars 50cm.

NOTE!
Refer to architectural project for the positioning and dimensions of openings.

BEAM B-1 Sc. 1:100

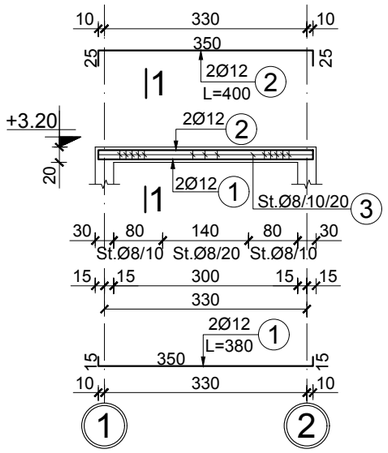

SECTION 1-1 sc. 1:25

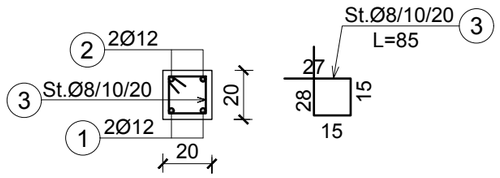

TABELA E SPECIFIKIMIT TE ARMATURES / TABLE OF REINFORCEMENT									
Lloji Type	Sasia Pieces	Poz. Element	d	l (cm)	cope quantity	L (m)	Pesha/nj weight/unit	Pesha / Weight	TOTALI/ TOTAL
Br-1	1	1	12	380	2	7.60	0.888	6.75	13.49
		2	12	400	2	8.00	0.888	7.10	14.21
		3	8	85	24	20.40	0.395	8.05	16.10
									43.80

CONCRETE: C30/37
STEEL: S500
CONCRETE COVER: a=2.5cm

NOTE:
1. Sections B-B is displayed on page K-06.

REAN PROJEKTIM MBIKQYRJE KOLAUDIM

Digitally signed by Razije Naipi
Date: 2026.05.17 20:51:14 +02'00'

PROJECT: Rural Water Supply 3 - BMZ ID 2011 66 370, 2020 61 133/ Ujesjellesi Rural 3 - BMZ ID 2011 66 370, 2020 61 133 PROJEKTI: CONSULTING SERVICES FOR PROJECT PREPARATION AND FINAL DESIGN FOR CONSTRUCTION/RECONSTRUCTION OF WATER SUPPLY SYSTEMS IN RURAL AREAS SHERBIME KONSULENCE PER PERGATITJEN E PROJEKTEVE DHE PROJEKT ZBATIMEVE PER NDERTIMIN/RINDERTIMIN E RRJETIT TE UJESJELLESIT NE ZONAT RURALE	CLIENT: KLIENTI: ALBANIAN DEVELOPMENT FUND FONDI SHQIPTAR I ZHVILLIMIT	ENGINEER: INXHINIER: CES Consulting Engineers Salzgitter GmbH Sub - Consultant:			SCALE: SHKALLA: 1 : 1
TITLE: TITULLI: **STRUCTURAL PLAN LEVEL +3.20** **PLANI I STRUKTURAVE KUOTA +3.20**	FUNDING: FINANCUESI: KFW		01	FINAL	NOVEMBER2018	DATE: NOVEMBER 2018 APPROVAL DATE:
			00	DRAFT TO FINAL	AUGUST 2018	FILE NAME: EMRI DOK: RWS-024ORI_WW_TPS_STR.dwg
			No. Rev	DESCRIPTION OF REVISION	DATE	DWG No.: Nr. VIZATIMIT: RWSIII_024ORI_TPS_STR_006

SLAB LEVEL +3.20 (lower reinforcement), Sc. 1:25

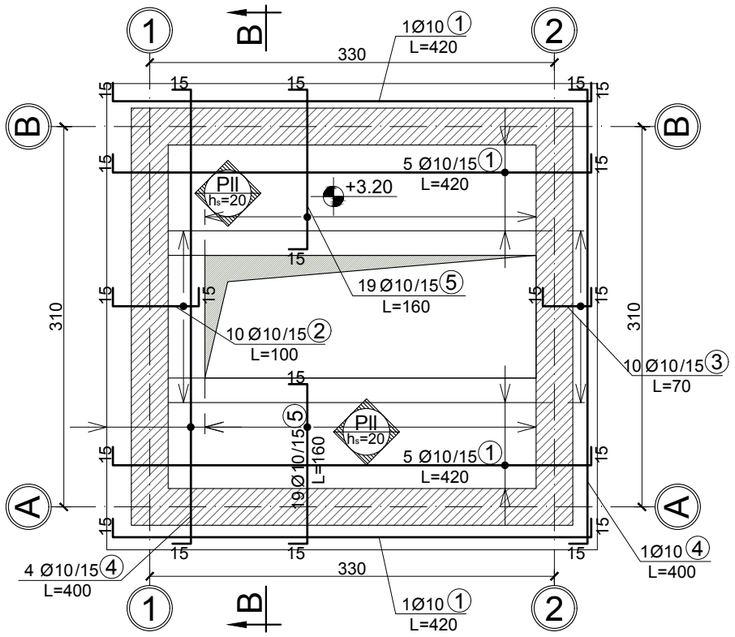

SLAB LEVEL +3.20 (upper reinforcement), Sc. 1:25

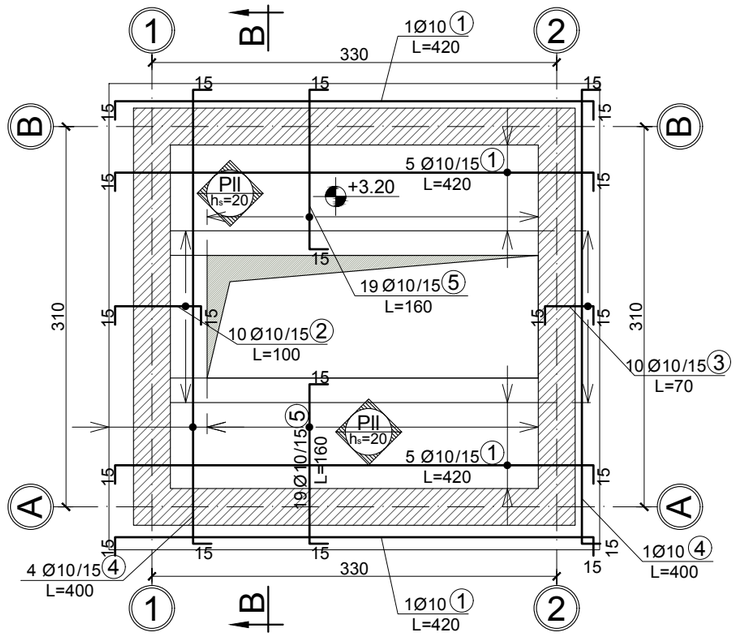

DETAIL D-A Sc. 1:25

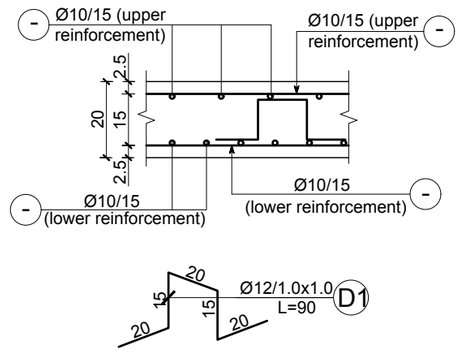

CONCRETE: C30/37
STEEL: S500
CONCRETE COVER: a=2.5cm

SECTION B-B Sc. 1:25

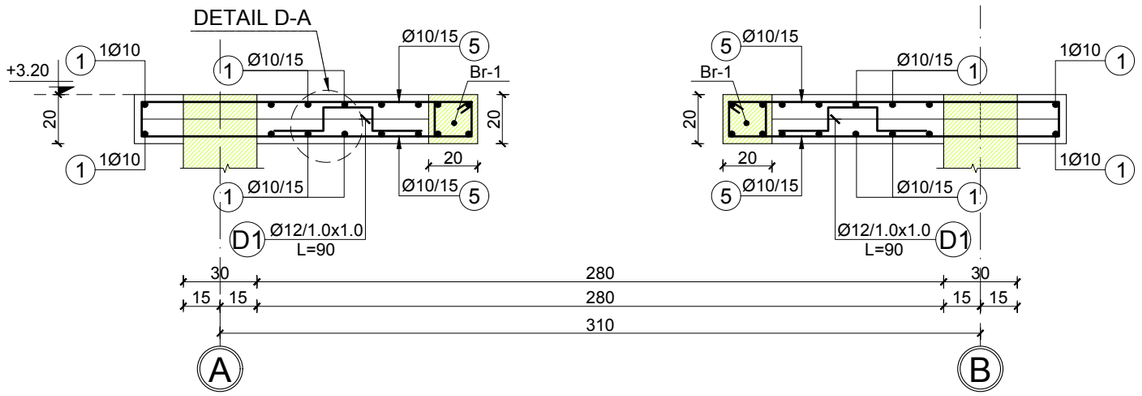

TABELA E SPECIFIKIMIT TE ARMATURES / TABLE OF REINFORCEMENT

Lloji Type	Sasia Pieces	Poz. Element	d	l (cm)	cope quantity	L (m)	Pesha/nj weight/unit	Pesha / Weight	TOTALI/ TOTAL
Slab level +3.20 (lower reinforcement)	1	1	10	420	12	50.40	0.617	31.07	31.07
		2	10	100	10	10.00	0.617	6.17	6.17
		3	10	70	10	7.00	0.617	4.32	4.32
		4	10	400	5	20.00	0.617	12.33	12.33
		5	10	160	39	62.40	0.617	38.47	38.47
		D1	12	90	5	4.50	0.888	4.00	4.00
									96.35
Slab level +3.20 (upper reinforcement)	1	1	10	420	12	50.40	0.617	31.07	31.07
		2	10	100	10	10.00	0.617	6.17	6.17
		3	10	70	10	7.00	0.617	4.32	4.32
		4	10	400	5	20.00	0.617	12.33	12.33
		5	10	160	39	62.40	0.617	38.47	38.47
									92.36

Digitally signed by Razije Naipi
Date: 2026.05.17 20:51:14 +02'00'

REAN 95 PROJEKTIM MBIKQYRJE KOLAUDIM

Razije Naipi

PROJECT: Rural Water Supply 3 - BMZ ID 2011 66 370, 2020 61 133/ Ujesjellesi Rural 3 - BMZ ID 2011 66 370, 2020 61 133
PROJEKTI: CONSULTING SERVICES FOR PROJECT PREPARATION AND FINAL DESIGN FOR CONSTRUCTION/RECONSTRUCTION OF WATER SUPPLY SYSTEMS IN RURAL AREAS
SHERBIME KONSULENCE PER PERGATITJEN E PROJEKTEVE DHE PROJEKT ZBATIMEVE PER NDERTIMIN/RINDERTIMIN E RRJETIT TE UJESJELLESIT NE ZONAT RURALE

TITLE: TITULLI: **SLAB REINFORCEMENT LEVEL +3.20**
ARMIMI I SOLETES KUOTA +3.20

CLIENT: KLIENTI: ALBANIAN DEVELOPMENT FUND
FONDI SHQIPTAR I ZHVILLIMIT

FUNDING: FINANCUESI: bashkëpunimi gjerman DEUTSCHE ZUSAMMENARBEIT KFW

ENGINEER: INXHINIER: CES Consulting Engineers Salzgitter GmbH
Sub - Consultant: STUDIO SE STANDARD ENGINEERING

No. Rev	DESCRIPTION OF REVISION	DATE
01	FINAL	NOVEMBER2018
00	DRAFT TO FINAL	AUGUST 2018

SCALE: SHKALLA: 1 : 1
DATE: NOVEMBER 2018
APPROVAL DATE:
FILE NAME: EMRI DOK: RWS-024ORI_WW_TPS_STR.dwg
DWG No.: Nr. VIZATIMIT: RWSIII_024ORI_TPS_STR_007

PRECAST HDPE SEWER MANHOLE, PLAN AND SECTIONS
PUSETAT PLASTIKE TE KANALIZIMEVE, PLAN DHE PRERJE

PRECAST MANHOLE
FOR GRAVITY MAIN COLLECTOR
DN1000

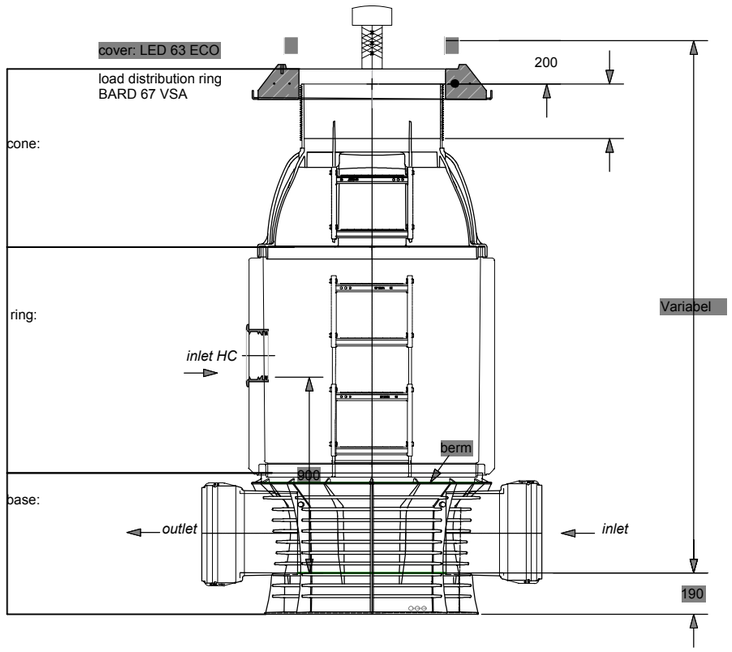

	DESCRIPTION
1	Cast iron manhole cover and frame, without ventilation opening, EN 124, Class D400, Clear opening d= 600 mm
2	Concrete Load Distributing Ring
3	Manhole Cone (Trimmable at the base of the rip)
4	Built-in climbing aid
5	Manhole Ring
6	Manhole Base
7	Rocker pipe 1-2 m with linking piece to cor. HDPE pipe
8	Granular Subbase According EN 1610 min 20 cm

Manhole For Sewage Network
Cross Section DN 600/200
SCALE. 1:25

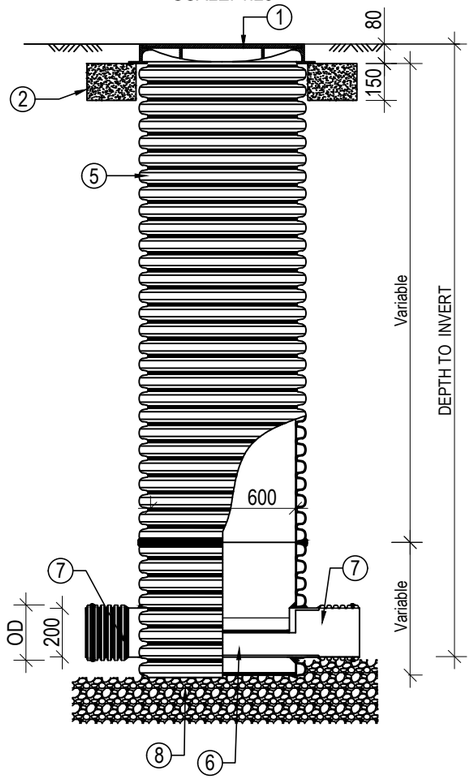

Type 1 with 1 Inlet and 1 Outlet

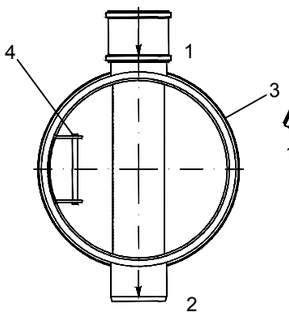

Type 2 with 1 Inlet and 1 Outlet

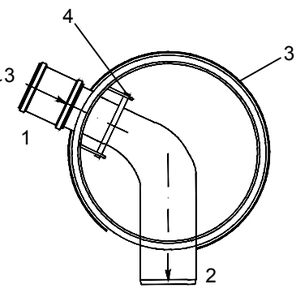

Type 3 with 3 Inlets and 1 Outlet

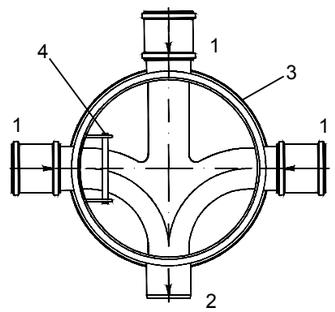

Type 4 with 2 Inlets and 1 Outlet

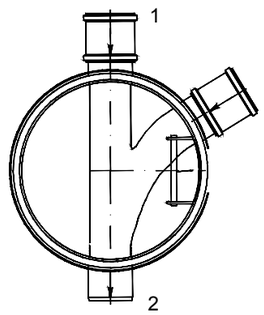

Type 5 with 2 Inlets and 1 Outlet

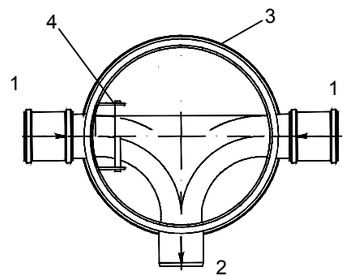

Type 6 with 2 Inlets and 1 Outlet

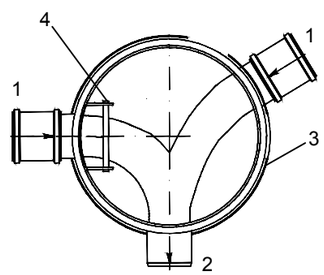

Type 7 with 3 Inlets and 1 Outlet

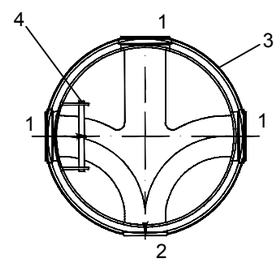

L E G E N D & NOTES:

1- Inlet pipe
2- Outlet pipe
3- Manhole
4- Manhole steps

REAN 95
PROJEKTIM MBIKQYRJE KOLAUDIM

PROJECT: Rural Water Supply 3 - BMZ ID 2011 66 370, 2020 61 133/ Ujesjellesi Rural 3 - BMZ ID 2011 66 370, 2020 61 133 PROJEKTI: CONSULTING SERVICES FOR PROJECT PREPARATION AND FINAL DESIGN FOR CONSTRUCTION/RECONSTRUCTION OF WATER SUPPLY SYSTEMS IN RURAL AREAS SHERBIME KONSULENCE PER PERGATITJEN E PROJEKTEVE DHE PROJEKT ZBATIMEVE PER NDERTIMIN/RINDERTIMIN E RRJETIT TE UJESJELLESIT NE ZONAT RURALE	CLIENT: KLIENTI: ALBANIAN DEVELOPMENT FUND FONDI SHQIPTAR I ZHVILLIMIT	ENGINEER: INXHINIER: CES Consulting Engineers Salzgitter GmbH Sub - Consultant:			SCALE: SHKALLA: NTS
TITLE: TITULLI: PRECAST HDPE SEWER MANHOLE, PLAN AND SECTIONS PUSETAT PLASTIKE TE KANALIZIMEVE, PLAN DHE PRERJE	FUNDING: FINANCUESI: bashkëpunimi gjerman DEUTSCHE ZUSAMMENARBEIT KFW		01	FINAL	NOVEMBER2018	DATE: APPROVAL DATE: NOVEMBER 2018
			00	DRAFT TO FINAL	AUGUST 2018	FILE NAME: EMRI DOK: RWSIII_024ORI_WW__TRA_SMH.dwg
			No. Rev	DESCRIPTION OF REVISION	DATE	DWG No.: Nr. VIZATIMIT: RWSIII_024ORI_WW_TRA_SMH_001

Razije Naipi
Digitally signed by Razije Naipi
Date: 2026.05.17 20:51:14 +02'00'