STANDARD SHQIPTAR

SSH EN 590:2013+A1:2017

Lëndë djegëse e lëngët për automjete -Gazoil (Diesel) - Kërkesat dhe metodat e provës

Automotive fuels - Diesel - Requirements and test methods

DPS Drejtoria e Përgjithshme e Standardizimit
Adresa: Rruga "Mine Peza", 143/3,1014 Tiranë – Shqipëri,
Kutia Postare: 98,
Tel: + 355 (0) 4 222 62 55; Fax: + 355 (0) 4 224 71 77
E-mail: info@dps.gov.al

Hyrje

Drejtoria e Përgjithshme e Standardizimit, DPS, është Organi Kombëtar i Standardizimit në Republikën e Shqipërisë.

DPS harton, miraton dhe publikon standardet puro shqiptare, si dhe adopton dhe publikon standardet evropiane dhe ndërkombëtare, duke iu dhënë atyre statusin e Standardeve Shqiptare (SSH). Të njejtat kompetenca ka edhe për dokumentet e standardizimit.
Miratimi formal i tyre bëhet nga Drejtori i Përgjithshëm i DPS.

Standardet Shqiptare hartohen dhe adoptohen nga Komitetet Teknike (KT). Anëtarët e Komiteteve Teknike janë specialistë të subjekteve shtetërore dhe private nga fusha të ndryshme të ekonomisë që angazhohen vullnetarisht në këtë proces.

Standardi EN 590:2013+A1:2017 është hartuar nga KT 19 dhe miratuar nga DPS si standard më 2017-06-15.

Standardi SSH EN 590:2013+A1:2017 botohet për herë të pestë.

Ky standard është i njejtë me standardin EN 590:2013+A1:2017 dhe riprodhohet me lejen e:

Komitetit Evropian për Standardizimin – CEN,
Avenue Marnix 17
B-1000 Brussels

Standardet rishikohen kur është e nevojshme, prandaj është e domosdoshme që përdoruesi të marrë botimin e fundit si dhe amendamentet e tij, nëse ka të tilla.

EUROPEAN STANDARD

NORME EUROPÉENNE

EUROPÄISCHE NORM

EN 590:2013+A1

May 2017

ICS 75.160.20

Supersedes EN 590:2013

English Version

Automotive fuels - Diesel - Requirements and test methods

Carburants pour automobiles - Carburants pour moteur diesel (gazole) - Exigences et méthodes d'essai

Kraftstoffe für Kraftfahrzeuge - Dieselkraftstoff - Anforderungen und Prüfverfahren

This European Standard was approved by CEN on 26 July 2013 and includes Amendment 1 approved by CEN on 17 March 2017.

CEN members are bound to comply with the CEN/CENELEC Internal Regulations which stipulate the conditions for giving this European Standard the status of a national standard without any alteration. Up-to-date lists and bibliographical references concerning such national standards may be obtained on application to the CEN-CENELEC Management Centre or to any CEN member.

This European Standard exists in three official versions (English, French, German). A version in any other language made by translation under the responsibility of a CEN member into its own language and notified to the CEN-CENELEC Management Centre has the same status as the official versions.

CEN members are the national standards bodies of Austria, Belgium, Bulgaria, Croatia, Cyprus, Czech Republic, Denmark, Estonia, Finland, Former Yugoslav Republic of Macedonia, France, Germany, Greece, Hungary, Iceland, Ireland, Italy, Latvia, Lithuania, Luxembourg, Malta, Netherlands, Norway, Poland, Portugal, Romania, Serbia, Slovakia, Slovenia, Spain, Sweden, Switzerland, Turkey and United Kingdom.

EUROPEAN COMMITTEE FOR STANDARDIZATION
COMITÉ EUROPÉEN DE NORMALISATION
EUROPÄISCHES KOMITEE FÜR NORMUNG

CEN-CENELEC Management Centre: Avenue Marnix 17, B-1000 Brussels

Ref. No. EN 590:2013+A1:2017 E

Contents

European foreword

This document (EN 590:2013+A1:2017) has been prepared by Technical Committee CEN/TC 19 "Gaseous and liquid fuels, lubricants and related products of petroleum, synthetic and biological origin", the secretariat of which is held by NEN.

This European Standard shall be given the status of a national standard, either by publication of an identical text or by endorsement, at the latest by November 2017, and conflicting national standards shall be withdrawn at the latest by November 2017.

Attention is drawn to the possibility that some of the elements of this document may be the subject of patent rights. CEN [and/or CENELEC] shall not be held responsible for identifying any or all such patent rights.

This document supersedes [A1⟩ EN 590:2013 ⟨A1].

This document includes Amendment 1 approved by CEN on 17 March 2017.

The start and finish of text introduced or altered by amendment is indicated in the text by tags [A1⟩ ⟨A1].

This document has been prepared under a mandate given to CEN by the European Commission and the European Free Trade Association [5]

[A1⟩ Requirements following amendment 2003/17/EC [2], 2009/30/EC [3], 2011/63/EU [4] and 2014/77/EU [12] to the European Fuels Quality Directive 98/70/EC [1], are taken into account. ⟨A1] Dates are included with all normative test method references in order to comply with the requirements of the European Commission; with the accompanying assurance by CEN/TC 19 that any referenced updated versions will always give similar accuracy and the same or better precision (see [4]). [A1⟩ The marking at the pump of this product is in line with the requirements of the Fuels Quality Directive and the Alternative Fuels Infrastructure Directive [11]. ⟨A1]

Significant technical changes between this European Standard and the previous edition are:

— Inclusion of the revised EN 14214 FAME specification.

— Specific requirements concerning the limitation of use of methylcyclopentadienyl manganese tricarbonyl (MMT) as required by the EC have been incorporated.

— Addition of the Fuel Ignition Tester (EN 16144) as an alternate test method to the CFR engine test.

— Addition of Simulated Distillation by gas chromatography (GC), EN ISO 3924, as an alternate test method to distillation by EN ISO 3405.

— Introduction of the improved EDXRF determination technique for low sulfur contents, EN ISO 13032, in replacement of EN ISO 20847.

Annex A is normative and contains the precision data generated on the test methods, which are the result of inter-laboratory testing, carried out by working groups of CEN/TC 19. Many of the test methods included in this standard were the subject of inter-laboratory testing to determine the applicability of the method and its precision in relation to blends of automotive diesel fuel containing 10 % (*V/V*) or higher of different sources of fatty acid methyl esters (FAME).

According to the CEN-CENELEC Internal Regulations, the national standards organisations of the following countries are bound to implement this European Standard: Austria, Belgium, Bulgaria, Croatia, Cyprus, Czech Republic, Denmark, Estonia, Finland, Former Yugoslav Republic of Macedonia, France, Germany, Greece, Hungary, Iceland, Ireland, Italy, Latvia, Lithuania, Luxembourg, Malta, Netherlands, Norway, Poland, Portugal, Romania, Serbia, Slovakia, Slovenia, Spain, Sweden, Switzerland, Turkey and the United Kingdom.

1 Scope

This European Standard specifies requirements and test methods for marketed and delivered automotive diesel fuel. It is applicable to automotive diesel fuel for use in diesel engine vehicles designed to run on automotive diesel fuel containing up to 7,0 %(*V/V*) Fatty Acid Methyl Ester.

NOTE For the purposes of this European Standard, the terms "% (*m/m*)" and "% (*V/V*)" are used to represent respectively the mass fraction and the volume fraction.

2 Normative references

The following documents, in whole or in part, are normatively referenced in this document and are indispensable for its application. For dated references, only the edition cited applies. For undated references, the latest edition of the referenced document (including any amendments) applies.

[A1⟩ EN 116:2015, *Diesel and domestic heating fuels - Determination of cold filter plugging point - Stepwise cooling bath method* ⟨A1]

[A1⟩ EN 12662:2014, *Liquid petroleum products - Determination of total contamination in middle distillates, diesel fuels and fatty acid methyl esters* ⟨A1]

[A1⟩ EN 12916:2016, *Petroleum products - Determination of aromatic hydrocarbon types in middle distillates - High performance liquid chromatography method with refractive index detection* ⟨A1]

[A1⟩ EN 14078:2014, *Liquid petroleum products - Determination of fatty acid methyl ester (FAME) content in middle distillates - Infrared spectrometry method* ⟨A1]

[A1⟩ EN 14214:2012+A1:2014, *Liquid petroleum products - Fatty acid methyl esters (FAME) for use in diesel engines and heating applications - Requirements and test methods* ⟨A1]

[A1⟩ EN 15195:2014, *Liquid petroleum products - Determination of ignition delay and derived cetane number (DCN) of middle distillate fuels by combustion in a constant volume chamber* ⟨A1]

[A1⟩ EN 15751:2014, *Automotive fuels - Fatty acid methyl ester (FAME) fuel and blends with diesel fuel - Determination of oxidation stability by accelerated oxidation method* ⟨A1]

EN 16144:2012, *Liquid petroleum products - Determination of ignition delay and derived cetane number (DCN) of middle distillate fuels - Fixed range injection period, constant volume combustion chamber method*

EN 16329:2013, *Diesel and domestic heating fuels - Determination of cold filter plugging point - Linear cooling bath method*

[A1⟩ EN 16576:2014, *Automotive fuels - Determination of manganese and iron content in diesel - Inductively coupled plasma optical emission spectrometry (ICP OES) method* ⟨A1]

[A1⟩ EN 16715:2015, *Liquid petroleum products - Determination of ignition delay and derived cetane number (DCN) of middle distillate fuels - Ignition delay and combustion delay determination using a constant volume combustion chamber with direct fuel injection* ⟨A1]

[A1⟩ EN 16942:2016, *Fuels - Identification of vehicle compatibility - Graphical expression for consumer information* ⟨A1]

EN 23015:1994, *Petroleum products - Determination of cloud point (ISO 3015:1992)*

EN ISO 2160:1998, *Petroleum products - Corrosiveness to copper - Copper strip test (ISO 2160:1998)*

[A1] EN ISO 2719:2016 [1], *Determination of flash point - Pensky-Martens closed cup method (ISO 2719:2016)* [A1]

[A1] EN ISO 3104:1996[1], *Petroleum products - Transparent and opaque liquids - Determination of kinematic viscosity and calculation of dynamic viscosity (ISO 3104:1994)* [A1]

EN ISO 3170:2004, *Petroleum liquids - Manual sampling (ISO 3170:2004)*

[A1] EN ISO 3171:1999, *Petroleum liquids - Automatic pipeline sampling (ISO 3171:1988)* [A1]

[A1] EN ISO 3405:2011[1], *Petroleum products - Determination of distillation characteristics at atmospheric pressure (ISO 3405:2011)* [A1]

[A1] EN ISO 3675:1998[1], *Crude petroleum and liquid petroleum products - Laboratory determination of density - Hydrometer method (ISO 3675:1998)* [A1]

[A1] EN ISO 3924:2016, *Petroleum products - Determination of boiling range distribution - Gas chromatography method (ISO 3924:2016)* [A1]

[A1] EN ISO 4259:2006[1], *Petroleum products - Determination and application of precision data in relation to methods of test (ISO 4259:2006)* [A1]

EN ISO 4264:2007[2], *Petroleum products - Calculation of cetane index of middle-distillate fuels by the four-variable equation (ISO 4264:2007)*

EN ISO 5165:1998[1], *Petroleum products - Determination of the ignition quality of diesel fuels - Cetane engine method (ISO 5165:1998)*

EN ISO 6245:2002, *Petroleum products - Determination of ash (ISO 6245:2001)*

[A1] EN ISO 10370:2014, *Petroleum products - Determination of carbon residue - Micro method (ISO 10370:2014)* [A1]

[A1] EN ISO 12156-1, *Diesel fuel - Assessment of lubricity using the high-frequency reciprocating rig (HFRR) - Part 1: Test method (ISO 12156-1)* [A1]

[A1] EN ISO 12185:1996[1], *Crude petroleum and petroleum products - Determination of density - Oscillating U-tube method (ISO 12185:1996)* [A1]

EN ISO 12205:1996, *Petroleum products - Determination of the oxidation stability of middle-distillate fuels (ISO 12205:1995)*

EN ISO 12937:2000, *Petroleum products - Determination of water - Coulometric Karl Fischer titration method (ISO 12937:2000)*

EN ISO 13032:2012, *Petroleum products - Determination of low concentration of sulfur in automotive fuels - Energy-dispersive X-ray fluorescence spectrometric method (ISO 13032:2012)*

---

1 Under revision.

2 This document is currently impacted by EN ISO 4264:2007/A1:2013.

EN ISO 13759:1996, *Petroleum products - Determination of alkyl nitrate in diesel fuels - Spectrometric method (ISO 13759:1996)*

EN ISO 20846:2011, *Petroleum products - Determination of sulfur content of automotive fuels - Ultraviolet fluorescence method (ISO 20846:2011)*

EN ISO 20884:2011, *Petroleum products - Determination of sulfur content of automotive fuels - Wavelength-dispersive X-ray fluorescence spectrometry (ISO 20884:2011)*

3 Sampling

Samples shall be taken as described in EN ISO 3170 or EN ISO 3171 and/or in accordance with the requirements of national standards or regulations for the sampling of automotive diesel fuel. The national requirements shall be set out in detail or shall be referred to by reference in a National Annex to this European Standard.

In view of the sensitivity of some of the test methods referred to in this European Standard, particular attention shall be paid to compliance with any guidance on sampling containers which is included in the test method standard.

4 Pump marking

[A1] Information to be marked on dispensing pumps and nozzles used for delivering automotive diesel fuel, and the dimensions of the mark shall be in accordance with EN 16942. [A1]

Labelling shall be clearly visible, easily legible and displayed at any point where diesel with metallic additives is made available to consumers. The label shall contain: "Contains metallic additives" in the national language(s) and shall be laid down in the National Annex to this document.

5 Requirements and test methods

5.1 Dyes and markers

The use of dyes or markers is allowed.

5.2 Additives

5.2.1 General

In order to improve the performance quality, the use of additives is allowed. Suitable fuel additives without known harmful side-effects are recommended in the appropriate amount, to help to avoid deterioration of driveability and emissions control durability. Other technical means with equivalent effect may also be used.

NOTE Deposit forming tendency test methods suitable for routine control purposes have not yet been identified and developed.

5.2.2 Methylcyclopentadienyl manganese tricarbonyl (MMT)

[A1] When methylcyclopentadienyl manganese tricarbonyl (MMT) is used, a specific labelling is required (see also Clause 4). The presence of the MMT is limited via a manganese content limit as in Tables 1 and 2. [A1]

5.3 Fatty acid methyl ester (FAME)

[A1] Diesel fuel may contain up to 7,0 % (*V/V*) of FAME complying with EN 14214:2012+A1:2014, in which case the climate dependent requirements set out in 5.4.2 of EN 14214:2012+A1:2014 do not apply. [A1]

NOTE 1 A suitable method for the separation and identification of FAME is given in EN 14331 [6].

Climate dependent requirements for FAME as a blending component for use in diesel fuel according to this document are set out in 5.4.3 of [A1] EN 14214:2012+A1:2014 [A1]. The specific grades shall be specified on a national basis according to local climatic conditions and the FAME volume in the diesel fuel.

The finished blend of diesel fuel shall also comply with the climate dependent requirements set out in 5.6. of this document.

Cold flow additives, when used in FAME, should be specifically matched to the base diesel fuel and FAME quality to ensure correct performance consistent with the requirements set out in this European Standard. The choice could result in incompatibility between the cold flow additives used in the FAME and the diesel fuel. The choice of cold flow additive technology should be a contractual matter between the fuel blender and the FAME supplier taking into account the climatic-dependent requirements of the finished diesel fuel.

NOTE 2 Cold flow requirements for FAME as a blend component in diesel fuel are set out in Tables 3a and 3b and the National Annex of [A1] EN 14214:2012+A1:2014 [A1], in order to control maximum content of saturated monoglycerides in the final EN 590 blend to ensure trouble-free operation. Work is on-going to identify a suitable test method for saturated monoglycerides or a performance test to control this aspect of low temperature performance.

In order to improve the oxidation stability of FAME, it is strongly recommended to add oxidation stability enhancing additives to FAME at the production stage and before storage, providing an oxidation stability similar to that obtained with 1 000 mg/kg of 2,6-di-tert-butyl-4-hydroxytoluene (BHT, officially designated by IUPAC as 2,6-bis(1,1-dimethylethyl)-4-methylphenol).

The similar action may be read as providing oxidation stability performance at least equal to that obtained with 1 000 mg/kg of BHT.

CAUTION — There is a potential risk of precipitate formation with oxidation stability enhancing additives at low temperatures in low aromatic arctic fuel. Caution should therefore be taken in the choice of oxidation stability enhancing additives to arctic grade FAME.

5.4 Other (bio-) components

[A1] Limits for FAME do not apply to other (non-petroleum derived) hydrocarbons, such as Hydrotreated Vegetable Oil (HVO), Gas To Liquid (GTL) or Biomass To Liquid (BTL) derived hydrocarbons, since these paraffinic diesel components are allowed in any proportions provided that the final blend complies with the requirements of this European Standard. The co-processing of renewable[3] feedstock at refineries is also allowed provided that the final fuel meets the requirements of this European Standard". [A1]

5.5 Generally applicable requirements and related test methods

5.5.1 When tested by the methods indicated in Table 1, automotive diesel fuel shall be in accordance with the limits specified in Table 1. The test methods listed in Table 1 have been assessed for application to automotive diesel containing FAME. Precision data from inter-laboratory test

[3] For clarification of renewable see Directive 2009/28/EC [15].

programmes are given in normative Annex A, where these were found to be different from the precision data given in the test methods for neat petroleum products.

5.5.2 The limiting value for the carbon residue given in Table 1 is based on product prior to addition of ignition improver, if used. If a value exceeding the limit is obtained on finished fuel in the market, EN ISO 13759 shall be used as an indicator of the presence of a nitrate-containing compound. If an ignition improver is thus proved present, the limit value for the carbon residue of the product under test cannot be applied. The use of additives does not exempt the manufacturer from meeting the requirement of maximum 0,30 % (*m/m*) of carbon residue prior to addition of additives.

5.5.3 Diesel fuel shall be free from any adulterant or contaminant that may render the fuel unacceptable for use in diesel engine vehicles.

NOTE For further information on preventing contamination by water or sediment that may occur in the supply chain, or for cross-contamination, it is advisable to check CEN/TR 15367-1 [A1] [7] [A1] or CEN/TR 15367-3 [A1] [8] [A1] respectively.

Table 1 — Generally applicable requirements and test methods for automotive diesel fuel

Property	Unit	Limits		Test method [a] (See Clause 2)
		minimum	maximum	
Cetane number		**51,0**	–	EN ISO 5165 [b] EN 15195 EN 16144 [A1] EN 16715 [A1]
Cetane index		46,0	–	EN ISO 4264
Density at 15 °C	**kg/m³**	820,0	**845,0**	EN ISO 3675 [c] EN ISO 12185
Polycyclic aromatic hydrocarbons [d]	**% (*m/m*)**	–	**8,0**	EN 12916
Sulfur content	**mg/kg**	–	**10,0**	EN ISO 20846 [e] EN ISO 20884 EN ISO 13032
Manganese content [f] [A1] *Deleted text.* [A1]	**mg/l**	[A1] *Deleted text.* [A1] -	[A1] *Deleted text.* [A1] **2,0**	[A1] EN 16576 [A1]
Flash point	°C	Above 55,0	–	EN ISO 2719
Carbon residue [g] (on 10 % distillation residue)	% (*m/m*)	–	0,30	EN ISO 10370
Ash content	% (*m/m*)	–	0,010	EN ISO 6245
Water content	[A1] % (*m/m*) [A1]	–	[A1] 0,020 [A1]	EN ISO 12937
Total contamination	mg/kg	–	24	EN 12662 [h]
Copper strip corrosion (3 h at 50 °C)	rating	class 1		EN ISO 2160
Fatty acid methyl ester (FAME) content [i]	**% (*V/V*)**	-	**7,0**	EN 14078
Oxidation stability [j]	g/m³ h	– 20	25 -	EN ISO 12205 EN 15751
[A1] Lubricity, wear scar diameter (WSD) at 60°C [A1]	µm	–	460	EN ISO 12156-1 [A1] [n] [A1]
Viscosity at 40 °C	mm²/s	2,000	4,500	EN ISO 3104
Distillation [k, l] % (*V/V*) recovered at 250 °C % (*V/V*) recovered at 350 °C **95 % (*V/V*) recovered at**	 % (*V/V*) % (*V/V*) **°C**	 85 	 < 65 **360**	EN ISO 3405 [m] EN ISO 3924

[A1] NOTE Requirements in bold refer to the European Fuels Directive 98/70/EC [1], including subsequent Amendments [2], [3], [4] and [12] [A1].

[a] See also 5.7.1.
[b] See also 5.7.4.
[c] See also 5.7.2.
[d] For the purposes of this European Standard, polycyclic aromatic hydrocarbons are defined as the total aromatic hydrocarbon content less the mono-aromatic hydrocarbon content, both as determined by EN 12916.
[e] See also 5.7.3.
[f] See also 5.2.2.
[g] See also 5.5.2 and Annex A.
[h] Further investigation into the total contamination test method to improve the precision, particularly in the presence of FAME, is being carried out by CEN.
[i] FAME shall meet the requirements of EN 14214, see [3].
[j] When diesel fuel contains more than 2 %(*V/V*) FAME, oxidation stability as determined by EN 15751 is the requirement.
[k] For the calculation of the cetane index the 10 %, 50 % and 90 % (V/V) recovery points are also needed.
[l] The limits for distillation at 250 °C and 350 °C are included for diesel fuel in line with EU Common Customs tariff.
[m] EN ISO 3924 gives instructions to convert to ISO 3405-equivalent data. See also 5.7.5.
[n] [A1] At the time of publication this standard is under revision. This revision is focussed on correcting the ambient test conditions to reflect those met in the ILS conducted. This will not affect the precision of the test method. [A1]

5.6 Climate dependent requirements and related test methods

5.6.1 For climate-dependent requirements, options are given to allow for seasonal grades to be set nationally. The options are for temperate climates six CFPP (cold filter plugging point) grades and for arctic or severe winter climates five different classes. Climate-dependent requirements are given in Table 2 (temperate climates) and Table 3 (arctic or severe winter climates). When tested by the methods given in Table 2 and Table 3, automotive diesel fuel shall be in accordance with the limits specified in these tables.

A1 NOTE Attention is drawn to CEN/TR 16884 [13] on cold operability testing and fuel performance correlation. In addition, CEN has developed another technical report on cold filterability issues [14] that have been reported in some geographical areas at low temperatures above the cloud point of the fuel. Work to improve understanding of these issues and develop technical solutions is on-going within CEN and some national standardisation bodies. A1

Table 2 — Climate-related requirements and test methods — Temperate climates

Property	Unit	Limits						Test method [a] (See Clause 2)
		Grade A	Grade B	Grade C	Grade D	Grade E	Grade F	
CFPP	°C, max.	+5	0	−5	−10	−15	−20	EN 116 [b] EN 16329

[a] See also 5.7.1.
[b] See 5.7.6.

Table 3 — Climate-related requirements and test methods — Arctic or severe winter climates

Property	Units	Limits					Test method [a]
		class 0	class 1	class 2	class 3	class 4	(See Clause 2)
CFPP	°C, max.	−20	−26	−32	−38	−44	EN 116 [b] EN 16329
Cloud point	°C, max.	−10	−16	−22	−28	−34	EN 23015
Density at 15 °C	kg/m³,min. kg/m³, max.	800,0 845,0	800,0 845,0	800,0 840,0	800,0 840,0	800,0 840,0	EN ISO 3675 [c] EN ISO 12185
Viscosity at 40 °C	mm²/s, min. mm²/s, max.	1,500 4,000	1,500 4,000	1,500 4,000	1,400 4,000	1,200 4,000	EN ISO 3104
Cetane number EU [e]	minimum	51,0	51,0	51,0	51,0	51,0	EN ISO 5165 [d] EN 15195 EN 16144
Cetane number [f]	minimum	49,0	49,0	48,0	47,0	47,0	EN ISO 5165 [d] EN 15195 EN 16144
Cetane index	minimum	46,0	46,0	46,0	43,0	43,0	EN ISO 4264
Distillation [g, h] recovered at 180 °C recovered at 340 °C	 % (*V*/*V*), max. % (*V*/*V*), min.	 10,0 95,0	 10,0 95,0	 10,0 95,0	 10,0 95,0	 10,0 95,0	EN ISO 3405 [i] EN ISO 3924

[a] See also 5.7.1.

[b] See also 5.7.6.

[c] See also 5.7.2.

[d] See also 5.7.4.

[e] [A1] In countries where the European Fuels Directive 98/70 EC [1] including amendments 2003/17/EC [2], 2009/30/EC [3], 2011/63/EU [4] and 2014/77/EU [12] applies. [A1]

[f] [A1] In countries where the European Fuels Directive 98/70 EC [1] including amendments 2003/17/EC [2], 2009/30/EC [3], 2011/63/EU [4] and 2014/77/EU [12] does not apply. [A1]

[g] EU Common Customs Tariff definition of gas oil may not apply to the grades defined for use in arctic or severe winter climates.

[h] For the calculation of the cetane index the 10 % (*V*/*V*), 50 % (*V*/*V*) and 90 % (*V*/*V*) recovery points are also needed.

[i] See also 5.7.5.

5.6.2 In a National Annex to this European Standard, each country shall detail requirements for a summer and a winter grade and may include (an) intermediate and/or regional grade(s) which shall be justified by national meteorological data.

5.7 Precision and dispute

5.7.1 All test methods referred to in this European Standard include a precision statement. In cases of dispute, the procedures for resolving the dispute and interpretation of the results based on test method precision, described in EN ISO 4259, shall be used.

5.7.2 In cases of dispute concerning density, [A1⟩ EN ISO 12185 ⟨A1] shall be used.

5.7.3 In cases of dispute concerning sulfur content, either EN ISO 20846 or EN ISO 20884 shall be used.

5.7.4 In cases of dispute concerning cetane number, EN ISO 5165 shall be used. For the determination of cetane number alternative methods to those indicated in Table 1 and Table 3 may also be used, provided that these methods originate from a recognised method series, and have a valid precision statement, derived in accordance with EN ISO 4259, which demonstrates precision at least equal to that of the referenced method. The test result, when using an alternative method, shall also have a demonstrable relationship to the result obtained when using the referenced method.

5.7.5 In cases of dispute concerning distillation, EN ISO 3405 shall be used.

5.7.6 In cases of dispute concerning CFPP, EN 116 shall be used.

Annex A
(normative)

Details of inter-laboratory test programme

Table A.1 presents the precision data obtained in inter-laboratory testing programmes by CEN/TC 19 [A1] [9] [A1] and the EI [A1] [10] [A1], that differ from those of test methods listed in Table 1 and that at the time of publication of this European Standard were not yet revised.

NOTE The following methods were found to have precision data for 5 % (*V/V*) FAME blends similar to the published values:

— Ash content: EN ISO 6245,

— Oxidation stability: EN ISO 12205,

— CFPP: EN 116.

Table A.1 — Precision data updates

Property	Test method	Unit	CEN/TC 19 data for 5 % (*V/V*) FAME blend
Viscosity at 40 °C	EN ISO 3104	mm^2/s	r = 0,001 1 X R = 0, 018 X
Flash point	EN ISO 2719	°C	r = 2,0 R = 3,5
Carbon residue	EN ISO 10370	% (*m/m*)	r = 0,143 0 $X^{0,5}$ R = 0,212 5 $X^{0,5}$
where r is repeatability (EN ISO 4259) R is reproducibility (EN ISO 4259) X is the mean of two results being compared			

Bibliography

[1] Directive 98/70/EC of the European Parliament and of the Council of 13 October 1998 relating to the quality of petrol and diesel fuels and amending Council Directive 93/12/EEC

[2] Directive 2003/17/EC of the European Parliament and of the Council of 3 March 2003 amending Directive 98/70/EC relating to the quality of petrol and diesel fuels and amending Council Directive 93/12/EEC

[3] Directive 2009/30/EC of the European Parliament and of the Council of 23 April 2009 amending Directive 98/70/EC as regards the specification of petrol, diesel and gas-oil and introducing a mechanism to monitor and reduce greenhouse gas emissions and amending Council Directive 1999/32/EC as regards the specification of fuel used by inland waterway vessels and repealing Directive 93/12/EEC

[4] Directive 2011/63/EU of 1 June 2011 amending, for the purpose of its adaptation to technical progress, Directive 98/70/EC of the European Parliament and of the Council relating to the quality of petrol and diesel fuels

[5] Mandate M/394 - Mandate to CEN on the revision of EN 590 to increase the concentration of FAME and FAEE to 10% v/v, 13 November 2006

[6] EN 14331:2004, *Liquid petroleum products - Separation and characterisation of fatty acid methyl esters (FAME) from middle distillates - Liquid chromatography (LC)/gas chromatography (GC) method*

A1 *Deleted text.* A1

A1 [7] A1 CEN/TR 15367-1, *Petroleum products - Guidelines for good housekeeping - Part 1: Automotive diesel fuels*

A1 [8] A1 CEN/TR 15367-3, *Petroleum products - Guide for good housekeeping - Part 3: Prevention of cross contamination*

A1 [9] A1 CEN/TR 15160, *Petroleum and related products - Applicability of diesel fuel test methods for Fatty Acid Methyl Esters (FAME) - Information and results on round robin tests*

A1 [10] A1 EI Research Report on IP 398 and EN ISO 10370, under publication, available from the Energy Institute, 61 New Cavendish Street, London W1G 7AR, England

A1 [11] Directive 2014/94/EU of the European Parliament and of the Council of 22 October 2014 on the deployment of alternative fuels infrastructure A1

A1 [12] Commission Directive 2014/77/EU of 10 June 2014 amending Annexes I and II of Directive 98/70/EC of the European Parliament and of the Council relating to the quality of petrol and diesel fuels" A1

A1 [13] CEN/TR 16884, *Automotive fuels — Diesel fuel — Cold operability testing and fuel performance correlation* A1

A1 [14] CEN/TR 16982, *Diesel blends - Cold filterability issues* A1

A1 [15] Directive 2009/28/EC of the European Parliament and of the Council of 23 April 2009 on the promotion of the use of energy from renewable sources and amending and subsequently repealing Directives 2001/77/EC and 2003/30/EC" A1

STANDARD SHQIPTAR

SSH EN 228:2012+A1:2017

Lëndët djegëse për automjete - Benzinë pa plumb - Kërkesat dhe metodat e provës

Automotive fuels - Unleaded petrol - Requirements and test methods

DPS Drejtoria e Përgjithshme e Standardizimit
Adresa: Rruga "Mine Peza", 143/3,1014 Tiranë – Shqipëri,
Kutia Postare: 98,
Tel: + 355 (0) 4 222 62 55; Fax: + 355 (0) 4 224 71 77
E-mail: info@dps.gov.al

Hyrje

Drejtoria e Përgjithshme e Standardizimit, DPS, është Organi Kombëtar i Standardizimit në Republikën e Shqipërisë.

DPS harton, miraton dhe publikon standardet puro shqiptare, si dhe adopton dhe publikon standardet evropiane dhe ndërkombëtare, duke iu dhënë atyre statusin e Standardeve Shqiptare (SSH). Të njejtat kompetenca ka edhe për dokumentet e standardizimit.
Miratimi formal i tyre bëhet nga Drejtori i Përgjithshëm i DPS.

Standardet Shqiptare hartohen dhe adoptohen nga Komitetet Teknike (KT). Anëtarët e Komiteteve Teknike janë specialistë të subjekteve shtetërore dhe private nga fusha të ndryshme të ekonomisë që angazhohen vullnetarisht në këtë proces.

Standardi EN 228:2012+A1:2017 është hartuar nga KT 19 dhe miratuar nga DPS si standard më 2017-06-15.

Standardi SSH EN 228:2012+A1:2017 botohet për herë të katërt.

Ky standard është i njejtë me standardin EN 228:2012+A1:2017 dhe riprodhohet me lejen e:

Komitetit Evropian për Standardizimin – CEN,
Avenue Marnix 17
B-1000 Brussels

Standardet rishikohen kur është e nevojshme, prandaj është e domosdoshme që përdoruesi të marrë botimin e fundit si dhe amendamentet e tij, nëse ka të tilla.

EUROPEAN STANDARD

NORME EUROPÉENNE

EUROPÄISCHE NORM

EN 228:2012+A1

May 2017

ICS 75.160.20

Supersedes EN 228:2012

English Version

Automotive fuels - Unleaded petrol - Requirements and test methods

Carburants pour automobiles - Essence sans plomb - Exigences et méthodes d'essai

Kraftstoffe für Kraftfahrzeuge - Unverbleite Ottokraftstoffe - Anforderungen und Prüfverfahren

This European Standard was approved by CEN on 1 September 2012 and includes Amendment 1 approved by CEN on 17 March 2017.

CEN members are bound to comply with the CEN/CENELEC Internal Regulations which stipulate the conditions for giving this European Standard the status of a national standard without any alteration. Up-to-date lists and bibliographical references concerning such national standards may be obtained on application to the CEN-CENELEC Management Centre or to any CEN member.

This European Standard exists in three official versions (English, French, German). A version in any other language made by translation under the responsibility of a CEN member into its own language and notified to the CEN-CENELEC Management Centre has the same status as the official versions.

CEN members are the national standards bodies of Austria, Belgium, Bulgaria, Croatia, Cyprus, Czech Republic, Denmark, Estonia, Finland, Former Yugoslav Republic of Macedonia, France, Germany, Greece, Hungary, Iceland, Ireland, Italy, Latvia, Lithuania, Luxembourg, Malta, Netherlands, Norway, Poland, Portugal, Romania, Serbia, Slovakia, Slovenia, Spain, Sweden, Switzerland, Turkey and United Kingdom.

EUROPEAN COMMITTEE FOR STANDARDIZATION
COMITÉ EUROPÉEN DE NORMALISATION
EUROPÄISCHES KOMITEE FÜR NORMUNG

CEN-CENELEC Management Centre: Avenue Marnix 17, B-1000 Brussels

Ref. No. EN 228:2012+A1:2017 E

Contents

Page

European foreword

This document (EN 228:2012+A1:2017) has been prepared by Technical Committee CEN/TC 19 "Gaseous and liquid fuels, lubricants and related products of petroleum, synthetic and biological origin", the secretariat of which is held by NEN.

This European Standard shall be given the status of a national standard, either by publication of an identical text or by endorsement, at the latest by November 2017, and conflicting national standards shall be withdrawn at the latest by November 2017.

Attention is drawn to the possibility that some of the elements of this document may be the subject of patent rights. CEN [and/or CENELEC] shall not be held responsible for identifying any or all such patent rights.

This document supersedes [A1⟩ EN 228:2012 ⟨A1].

This document includes Amendment 1 approved by CEN on 17 March 2017.

The start and finish of text introduced or altered by amendment is indicated in the text by tags [A1⟩ ⟨A1].

This document was originally prepared under a mandate given to CEN by the European Commission and the European Free Trade Association. In addition to other standards, it is intended to be complementary to the regulatory measures contained in various EU Directives.

The following is a list of significant technical changes between this European Standard and the previous edition:

— [A1⟩ New requirements following amendment 2009/30/EC [3], 2011/63/EU [4] and 2014/77/EU [11] to the European Fuels Quality Directive 98/70/EC [1], are taken into account. ⟨A1] Tables 1, 2, 3, 4 and A.1 explicitly differentiate between requirements included in the European Fuels Directive 98/70/EC [1], including subsequent Amendments [2], [3] and [4], and other requirements.

— Specific requirements concerning the limitation of use of methylcyclopentadienyl manganese tricarbonyl (MMT) as required by the EC have been incorporated.

— As the introduction of 10 % (*V/V*) of ethanol in unleaded petrol has an impact on refinery and blending processes, an update of the distillation characteristics has been considered and a new Table 3 with slightly adapted volatility classes (E70, E100 and VLI) has been introduced. Work is still ongoing to generate data that would support the idea that these changes do not affect cold starting and hot weather driveability aspects of the vehicles. These updates have been agreed upon with precaution and might be revised depending on fuel-related issues in the market.

— Further specification is given, by including separate tables on unleaded petrol grade for older vehicles that are not warranted to use unleaded petrol with a high biofuel content. A CEN/TR aiming at giving guidance on oxygenate blending has been prepared in parallel [5].

— Further clarification on how to determine the vapour pressure waiver for unleaded petrol containing ethanol, allowed on the market under exemption circumstances, is given in Annex A. The exact number of decimal points for the waiver has been clarified [4].

— Several new or revised test methods have been introduced. The European Fuels Directive 98/70/EC [1], including its Amendments [2] [3] [4], [A1⟩ [11] ⟨A1] refers to test methods in

EN 228:2004, with the requirement that updated analytical methods shall be shown to give at least the same accuracy and at least the same precision as the methods they replace.

— Removal of the allowance for 50 mg/kg sulfur content.

— Reference to the revised ethanol specification EN 15376.

[A1] The marking at the pump of this product is in line with the requirements of the Fuels Quality Directive and the Alternative Fuels Infrastructure Directive [12]. [A1]

According to the CEN/CENELEC Internal Regulations, the national standards organisations of the following countries are bound to implement this European Standard: Austria, Belgium, Bulgaria, Croatia, Cyprus, Czech Republic, Denmark, Estonia, Finland, Former Yugoslav Republic of Macedonia, France, Germany, Greece, Hungary, Iceland, Ireland, Italy, Latvia, Lithuania, Luxembourg, Malta, Netherlands, Norway, Poland, Portugal, Romania, Serbia Slovakia, Slovenia, Spain, Sweden, Switzerland, Turkey and the United Kingdom.

1 Scope

This European Standard specifies requirements and test methods for marketed and delivered unleaded petrol. It is applicable to unleaded petrol for use in petrol engine vehicles designed to run on unleaded petrol.

This European Standard specifies two types of unleaded petrol: one type with a maximum oxygen content of 3,7 % (*m/m*) and a maximum ethanol content of 10,0 % (*V/V*) in Table 1, and one type intended for older vehicles that are not warranted to use unleaded petrol with a high biofuel content, with a maximum oxygen content of 2,7 % (*m/m*) and a maximum ethanol content of 5,0 % (*V/V*) in Table 2.

NOTE 1 The two types are based on European Directive requirements [3], [4], [A1] [11] [A1].

NOTE 2 For the purposes of this European Standard, the terms "% (*m/m*)" and "% (*V/V*)" are used to represent respectively the mass fraction, μ, and the volume fraction, φ.

2 Normative references

The following documents, in whole or in part, are normatively referenced in this document and are indispensable for its application. For dated references, only the edition cited applies. For undated references, the latest edition of the referenced document (including any amendments) applies.

EN 237:2004, *Liquid petroleum products — Petrol — Determination of low lead concentrations by atomic absorption spectrometry*

EN 238:1996/A1:2003, *Liquid petroleum products — Petrol — Determination of the benzene content by infrared spectrometry*

[A1] EN 1601:2014[1], *Liquid petroleum products — Unleaded petrol — Determination of organic oxygenate compounds and total organically bound oxygen content by gas chromatography (O-FID)* [A1]

EN 12177:1998, *Liquid petroleum products — Unleaded petrol — Determination of benzene content by gas chromatography*

[A1] EN 13016-1:2007[1], *Liquid petroleum products — Vapour pressure — Part 1: Determination of air saturated vapour pressure (ASVP) and calculated dry vapour pressure equivalent (DVPE)* [A1]

EN 13132:2000, *Liquid petroleum products — Unleaded petrol - Determination of organic oxygenate compounds and total organically bound oxygen content by gas chromatography using column switching*

[A1] EN 14275:2013, *Automotive fuels — Assessment of petrol and diesel fuel quality — Sampling from retail site pumps and commercial site fuel dispensers* [A1]

[A1] EN 15376:2014, *Automotive fuels — Ethanol as a blending component for petrol — Requirements and test methods* [A1]

EN 15553:2007, *Petroleum products and related materials — Determination of hydrocarbon types - Fluorescent indicator adsorption method*

[1] Under revision.

EN 16135:2011, *Automotive fuels — Determination of manganese content in unleaded petrol — Flame atomic absorption spectrometric method (FAAS)*

[A1] EN 16136:2015, *Automotive fuels — Determination of manganese content in unleaded petrol — Inductively coupled plasma optical emission spectrometry (ICP OES) method* [A1]

[A1] EN 16942:2016, *Fuels – Identification of vehicle compatibility – Graphical expression for consumer information* [A1]

EN ISO 2160:1998, *Petroleum products — Corrosiveness to copper — Copper strip test (ISO 2160:1998)*

EN ISO 3170:2004, *Petroleum liquids — Manual sampling (ISO 3170:2004)*

EN ISO 3171:1999, *Petroleum liquids — Automatic pipeline sampling (ISO 3171:1988)*

[A1] EN ISO 3405:2011[1], *Petroleum products — Determination of distillation characteristics at atmospheric pressure (ISO 3405:2011)* [A1]

EN ISO 3675:1998, *Crude petroleum and liquid petroleum products — Laboratory determination of density — Hydrometer method (ISO 3675:1998)*

[A1] EN ISO 4259:2006[1], *Petroleum products — Determination and application of precision data in relation to methods of test (ISO 4259:2006)* [A1]

[A1] EN ISO 5163:2014, *Petroleum products — Determination of knock characteristics of motor and aviation fuels — Motor method (ISO 5163:2014)* [A1]

[A1] EN ISO 5164:2014[1], *Petroleum products — Determination of knock characteristics of motor fuels — Research method (ISO 5164:2014)* [A1]

[A1] EN ISO 6246:2017, *Petroleum products — Gum content of light and middle distillate fuels — Jet evaporation method (ISO 6246:2017)* [A1]

EN ISO 7536:1996, *Petroleum products — Determination of oxidation stability of gasoline — Induction period method (ISO 7536:1994)*

[A1] EN ISO 12185:1996[1], *Crude petroleum and petroleum products — Determination of density — Oscillating U-tube method (ISO 12185:1996)* [A1]

EN ISO 13032:2012, *Petroleum products — Determination of low concentration of sulfur in automotive fuels — Energy-dispersive X-ray fluorescence spectrometric method (ISO 13032:2012)*

EN ISO 20846:2011, *Petroleum products — Determination of sulfur content of automotive fuels — Ultraviolet fluorescence method (ISO 20846:2011)*

EN ISO 20884:2011, *Petroleum products — Determination of sulfur content of automotive fuels — Wavelength-dispersive X-ray fluorescence spectrometry (ISO 20884:2011)*

[A1] EN ISO 22854:2016, *Liquid petroleum products - Determination of hydrocarbon types and oxygenates in automotive-motor gasoline and in ethanol (E85) automotive fuel - Multidimensional gas chromatography method (ISO 22854:2016)* [A1]

3 Sampling

Samples shall be taken as described in EN ISO 3170 or EN ISO 3171 and/or in accordance with the requirements of national standards or regulations for the sampling of unleaded petrol. The national requirements shall be set out in detail or shall be referred to by reference in a national annex to this European Standard.

In view of the sensitivity of some of the test methods referred to in this European Standard, particular attention shall be paid to compliance with any guidance on sampling containers, which is included in the test method standard.

It is essential that for sampling of unleaded petrol the containers used to take and store the samples before testing are not contaminated, especially with lead and/or sulfur.

4 Pump marking

[A1] Information to be marked on dispensing pumps and nozzles used for delivering unleaded petrol, and the dimensions of the mark shall be in accordance with EN 16942. [A1]

Labelling shall be clearly visible, easily legible and displayed at any point where unleaded petrol with metallic additives is made available to consumers. The label shall contain: "Contains metallic additives" in the national language(s) and shall be laid down in the National Annex to this document.

[A1] *Deleted text.* [A1]

[A1] It is also recommended that additional pump marking be applied to specify the RON supplied. [A1]

5 Requirements and test methods

5.1 [A1] Bio-components [A1]

5.1.1 [A1] Ethanol [A1]

Unleaded petrol may contain up to 10,0 % (*V/V*) of ethanol complying with EN 15376.

When ethanol is used as a blending component, it may contain denaturants, if required by European and national regulations. These denaturants are permitted provided they do not cause harmful side effects to vehicles and fuel distribution systems.

NOTE Further advice on handling and blending oxygenates in general can be found in [6]. Further guidance on blending oxygenates in accordance with the requirements of 2009/30/EC is given in CEN/TR 16435 [5].

A traceable record of biological origin is recommended. For the determination of biological origin of ethanol, an alternative is age determination, which is based on the beta(minus) decay of the radioactive carbon isotope C 14. This method [9] is considered too laborious for frequent testing, but it may be considered a useful tool to determine cases where the audit trail approach is contested.

5.1.2 [A1] Other (bio-)components

Limits for adding ethanol and other oxygenates as listed in Table1 and Table 2 do not apply to other hydrocarbons, such as synthetic hydrocarbons, and other renewable[2] hydrocarbons, since these components are allowed in any proportions provided that the final blend complies with the

[2] For clarification of renewable, see [13].

requirements of EN 228. The co-processing of renewable feedstock at refineries is also allowed provided that the final fuel meets the requirements of EN 228. ⟨A1⟩

5.2 Dyes and markers

The use of dyes and markers is allowed provided they do not cause harmful side effects to vehicle and fuel distribution systems.

5.3 Additives

5.3.1 General

In order to improve performance quality, the use of additives is allowed. Suitable fuel additives without known harmful side effects are recommended in the appropriate amount to help avoid deterioration of driveability and emissions control durability. Other technical means with equivalent effects may also be used.

⟨A1⟩ *Deleted text.* ⟨A1⟩

NOTE Deposit forming tendency test methods suitable for routine control purposes have not yet been identified and developed.

5.3.2 Phosphorus

In order to protect automotive catalyst systems, compounds containing phosphorus shall not be added to unleaded petrol.

5.3.3 Methylcyclopentadienyl Manganese Tricarbonyl (MMT)

When methylcyclopentadienyl manganese tricarbonyl (MMT) is used, a specific labelling is required (see Clause 4).

MMT is a metallic additive that may be used in unleaded petrol.

⟨A1⟩ *Deleted text.* ⟨A1⟩

5.4 Generally applicable requirements and test methods

When tested by the methods indicated in Tables 1, 2, 3 and 4, unleaded petrol, according to its maximum oxygen content, shall be in accordance with the limits specified respectively in Tables 1 and 3, or 2 and 4.

Member States may decide to continue to permit the placing on the market of unleaded regular grade petrol. This separate grade needs to conform to all requirements set out in Tables 1, 2 3 and 4 of this European Standard with the exception of a minimum motor octane number (MON) of 81 and a minimum research octane number (RON) of 91. The requirements and test methods are then to be laid down in a National Annex to this document.

Methods of test included as normative references in this European Standard, when updated, shall give at least the same accuracy and at least the same level of precision as the methods they replace.

⟨A1⟩ Unleaded petrol shall be free from any adulterant or contaminant that can render the fuel unacceptable for use in petrol engine vehicles designed to run on unleaded petrol. ⟨A1⟩

NOTE For further information on preventing contamination in the supply chain or for cross-contamination it is advisable to check CEN/TR 15367, Parts 2 and 3 respectively [7, 8]. A determination method for high boiling components in unleaded petrol is being under development by CEN.

Table 1 — Requirements and test methods for unleaded petrol with a maximum oxygen content of 3,7 % (*m/m*)

Property	Units	Limits Min	Limits Max	Test Method [a] (See 2. Normative references)
Research octane number, RON		**95,0**	--	EN ISO 5164 [b]
Motor octane number, MON		**85,0**	--	EN ISO 5163 [b]
Lead content	**mg/l**	--	**5,0**	EN 237
Density (at 15 °C) [c]	kg/m³	720,0	775,0	EN ISO 3675 EN ISO 12185
Sulfur content [c]	**mg/kg**	--	**10,0**	EN ISO 13032 EN ISO 20846 EN ISO 20884
Manganese content [d] [A1] *Deleted text.* [A1]	**mg/l**	[A1] *Deleted text.* [A1] --	[A1] *Deleted text.* [A1] **2,0**	EN 16135 EN 16136
Oxidation stability	minutes	360	--	EN ISO 7536
Existent gum content (solvent washed)	mg/100 ml	--	5	EN ISO 6246
Copper strip corrosion (3 h at 50 °C)	rating	class 1		EN ISO 2160
Appearance [e]		clear and bright		Visual inspection
Hydrocarbon type content [c] **- olefins** **- aromatics**	**% (*V/V*)**	 -- --	 **18,0** **35,0**	EN 15553 EN ISO 22854
Benzene content [c]	**% (*V/V*)**	--	**1,00**	EN 238 EN 12177 EN ISO 22854
Oxygen content [c, i]	**% (*m/m*)**	--	**3,7**	EN 1601 EN 13132 EN ISO 22854
Oxygenates content [c] **- methanol** [f] **- ethanol** [g] **- iso-propyl alcohol** **- iso-butyl alcohol** **- tert-butyl alcohol** **- ethers (5 or more C atoms)** **- other oxygenates** [h]	**% (*V/V*)**	 -- -- -- -- -- -- --	 **3,0** **10,0** **12,0** **15,0** **15,0** **22,0** **15,0**	EN 1601 EN 13132 EN ISO 22854

[A1] NOTE Requirements in bold refer to the European Fuels Directive 98/70/EC [1], including subsequent Amendments [2], [3], [4] and [11]. [A1]

[a] See also 5.7.1.

[b] [A1] A correction of 0,2 for MON and RON shall be subtracted for the calculation of the final result, before reporting according to the requirement of the European Fuels Directive 98/70/EC [1], including subsequent Amendments [2], [3], [4] and [11]. [A1] See also 5.6 and 5.7.2.

[c] See also 5.7.2.

[d] See also 5.3.3.

[e] Appearance shall be determined at ambient temperature.

[f] Stabilising agents shall be added.

[g] Ethanol when used as a blending component shall conform to EN 15376 (see 5.1). Stabilising agents may be added.

[h] Other mono-alcohols and ethers with a final boiling point no higher than prescribed in Table 3.

[i] [A1] EN 13131 contains no precision statement for an oxygen content above 3 % (*m/m*). [A1] Based on the round robin data from the last six years, CEN/TC 19 accepts an average reproducibility value of *R = 0,37* for all test methods.

Table 2 — Requirements and test methods for unleaded petrol with a maximum oxygen content of 2,7 % (*m/m*)

Property	Units	Limits Min	Limits Max	Test Method [a] (See 2. Normative references)
Research octane number, RON		**95,0**	--	EN ISO 5164 [b]
Motor octane number, MON		**85,0**	--	EN ISO 5163 [b]
Lead content	**mg/l**	--	**5,0**	EN 237
Density (at 15 °C) [c]	kg/m³	720,0	775,0	EN ISO 3675 EN ISO 12185
Sulfur content [c]	**mg/kg**	--	**10,0**	EN ISO 13032 EN ISO 20846 EN ISO 20884
Manganese content [d] [A1] *Deleted text.* [A1]	**mg/l**	[A1] *Deleted text.* [A1] --	[A1] *Deleted text.* [A1] **2,0**	EN 16135 EN 16136
Oxidation stability	minutes	360	--	EN ISO 7536
Existent gum content (solvent washed)	mg/100 ml	--	5	EN ISO 6246
Copper strip corrosion (3 h at 50 °C)	rating	class 1		EN ISO 2160
Appearance [e]		clear and bright		Visual inspection
Hydrocarbon type content [c,] **- olefins** **- aromatics**	*% (V/V)*	 -- --	 **18,0** **35,0**	EN 15553 EN ISO 22854
Benzene content [c]	*% (V/V)*	--	**1,00**	EN 238 EN 12177 EN ISO 22854
Oxygen content [c]	*% (m/m)*	--	**2,7**	EN 1601 EN 13132 EN ISO 22854
Oxygenates content [c] **- methanol** [f] **- ethanol** [g]	*% (V/V)*	 -- --	 **3,0** **5,0**	EN 1601 EN 13132 EN ISO 22854
- iso-propyl alcohol [h] **- iso-butyl alcohol** [h] **- tert-butyl alcohol** [h] **- ethers (5 or more C atoms)** [h] **- other oxygenates** [h, i]		}	Volume blending restricted to 2,7 % (*m/m*) maximum oxygen content	

[A1] NOTE Requirements in bold refer to the European Fuels Directive 98/70/EC [1], including subsequent Amendments [2], [3], [4] and [11]. [A1]

[a] See also 5.7.1

[b] [A1] A correction of 0,2 for MON and RON shall be subtracted for the calculation of the final result, before reporting according to the requirement of the European Fuels Directive 98/70/EC [1], including subsequent Amendments [2], [3], [4] and [11]. [A1] See also 5.6 and 5.7.2.

[c] See also 5.7.2.

[d] See also 5.3.3.

[e] Appearance shall be determined at ambient temperature.

[f] Stabilising agents shall be added.

[g] Ethanol when used as a blending component shall conform to EN 15376 (see 5.1). Stabilising agents may be added.

[h] The oxygen content of the finished unleaded petrol shall not exceed 2,7 % (*m/m*). [A1] See CEN/TR 16435 [5] on oxygenate blending for information. [A1]

[i] Other mono-alcohols and ethers with a final boiling point no higher than prescribed in Table 4.

5.5 Climatically dependent requirements and test methods

5.5.1 Water tolerance

Given the known potential for some petrol to absorb water, suppliers shall ensure that no water segregation occurs under the range of climatic conditions experienced in the country concerned. When there is a risk of water separation, anti-corrosion additives shall be incorporated.

NOTE For further information on preventing contamination by water or sediment that may occur in the supply chain or for cross-contamination it is advisable to check CEN/TR 15367, Parts 2 and 3 respectively [7, 8].

5.5.2 Volatility requirements

To meet hot and cold vehicle driveability requirements under the European seasonal and geographical conditions, ten volatility classes are defined as given in Table 3, Table 4 and illustrated in Figure 1 and Figure 2. Each country shall, in a national annex to this European Standard, specify for each type of unleaded petrol which of these ten volatility classes apply during which period of the year for defined regions of the country.

Class A shall apply during summer, starting not later than 1 May and ending not before 30 September. In countries with low ambient summer temperatures, as defined in [3], Class B shall apply during summer, starting not later than 1 June and ending not before 31 August.

Each country shall apply one or more volatility classes with VLI (Class C1, D1, E1, or F1) for the transition periods on either side of summer. Each transition period shall be a minimum of four weeks. When transition periods are deemed critical, the critical transition period(s) shall be a minimum of eight weeks. During the remaining period, one or more winter classes shall apply with or without VLI (Class C, C1, D, D1, E, E1, F or F1).

The application of the vapour pressure waiver permitted for unleaded petrol containing bioethanol is restricted to countries having fulfilled the requirements as laid down in [3].

When such waiver is permitted and applied, due reference shall be made in a national annex to this Standard and the waiver shall apply to Annex A.

Table 3 — Volatility classes for unleaded petrol with a maximum oxygen content of 3,7 % (*m/m*)

Property	Units	Limits						Test method [a]
		class A	class B	class C/C1	class D/D1	class E/E1	class F/F1	(See 2. Normative references)
Vapour pressure (VP)	kPa, min	45,0	45,0	50,0	60,0	65,0	70,0	EN 13016-1[b]
	kPa, max	**60,0**	**70,0**	80,0	90,0	95,0	100,0	
% evaporated at 70°C, E70	% (*V/V*), min	22,0	22,0	24,0	24,0	24,0	24,0	EN ISO 3405
	% (*V/V*), max	50,0	50,0	52,0	52,0	52,0	52,0	
% evaporated at 100°C, E100	**% (*V/V*), min**	**46,0**	**46,0**	**46,0**	**46,0**	**46,0**	**46,0**	EN ISO 3405
	% (*V/V*), max	72,0	72,0	72,0	72,0	72,0	72,0	
% evaporated at 150°C, E150	**% (*V/V*), min**	**75,0**	**75,0**	**75,0**	**75,0**	**75,0**	**75,0**	EN ISO 3405
Final Boiling Point FBP	°C, max	210	210	210	210	210	210	EN ISO 3405
Distillation residue	% (*V/V*), max	2	2	2	2	2	2	EN ISO 3405
Vapour Lock Index (VLI) (10 VP + 7 E70)	index, max	--	--	C --	D --	E --	F --	
Vapour Lock Index (VLI) (10 VP + 7 E70)	index, max			C1 1064	D1 1164	E1 1214	F1 1264	

A1 NOTE Requirements in bold refer to the European Fuels Directive 98/70/EC [1], including subsequent Amendments [2], [3], [4] and [11]. A1

[a] See also 5.7.1.

[b] Dry Vapour Pressure Equivalent (DVPE) shall be reported.

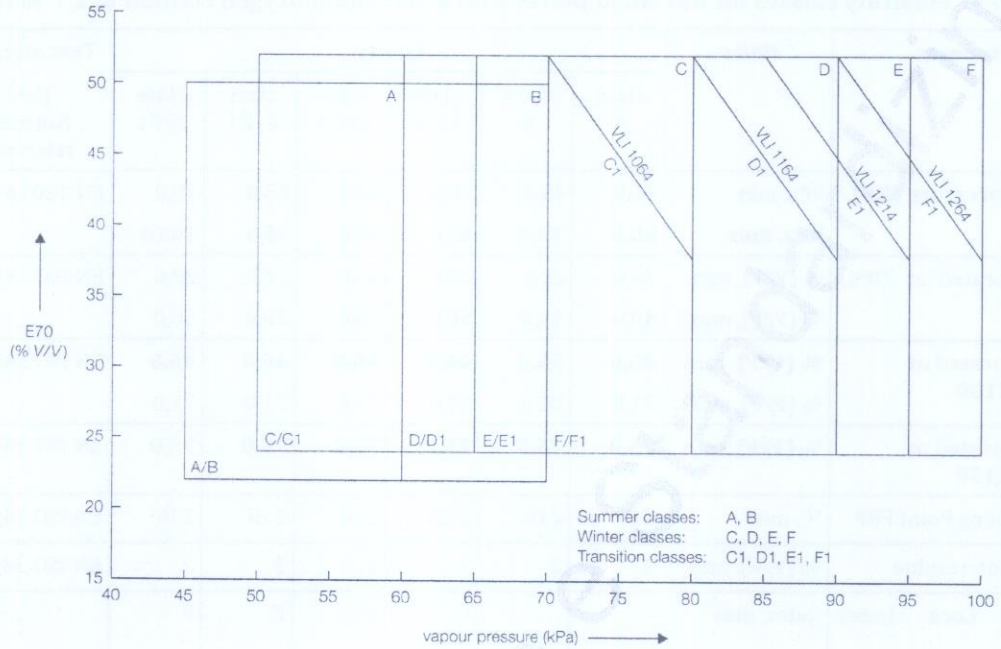

Figure 1 — Relation between VP, E70 and VLI for the ten different volatility classes for unleaded petrol with a maximum oxygen content of 3,7 % (*m/m*)

Table 4 — Volatility classes for unleaded petrol with a maximum oxygen content of 2,7 % (*m/m*)

Property	Units	Limits						Test method [a]
		class A	class B	class C/C1	class D/D1	class E/E1	class F/F1	(See 2. Normative references)
Vapour pressure (VP)	kPa, min **kPa, max**	45,0 **60,0**	45,0 **70,0**	50,0 80,0	60,0 90,0	65,0 95,0	70,0 100,0	EN 13016-1[b]
% evaporated at 70°C, E70	% (*V/V*), min % (*V/V*), max	20,0 48,0	20,0 48,0	22,0 50,0	22,0 50,0	22,0 50,0	22,0 50,0	EN ISO 3405
% evaporated at 100°C, E100	**% (*V/V*), min** % (*V/V*), max	**46,0** 71,0	**46,0** 71,0	**46,0** 71,0	**46,0** 71,0	**46,0** 71,0	**46,0** 71,0	EN ISO 3405
% evaporated at 150°C, E150	**% (*V/V*), min**	**75,0**	**75,0**	**75,0**	**75,0**	**75,0**	**75,0**	EN ISO 3405
Final Boiling Point FBP	°C, max	210	210	210	210	210	210	EN ISO 3405
Distillation residue	% (*V/V*), max	2	2	2	2	2	2	EN ISO 3405
Vapour Lock Index (VLI) (10 VP + 7 E70)	index, max	--	--	C --	D --	E --	F --	
Vapour Lock Index (VLI) (10 VP + 7 E70)	index, max			C1 1050	D1 1150	E1 1200	F1 1250	

[A1] NOTE Requirements in bold refer to the European Fuels Directive 98/70/EC [1], including subsequent Amendments [2], [3], [4] and [11]. [A1]

[a] See also 5.7.1.

[b] Dry Vapour Pressure Equivalent (DVPE) shall be reported.

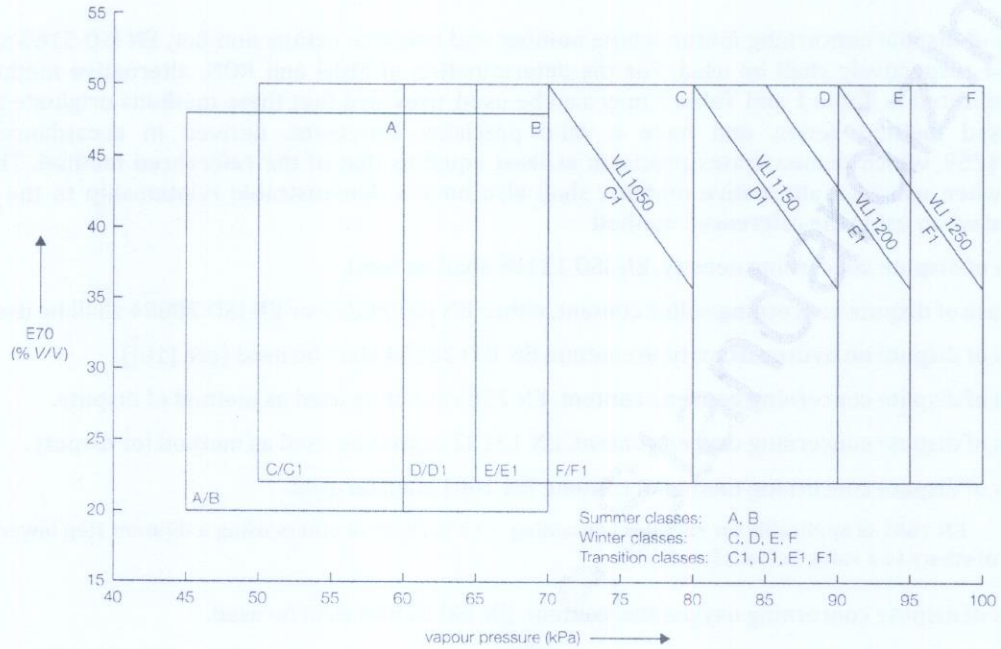

Figure 2 — Relation between VP, E70 and VLI for the ten different volatility classes for unleaded petrol with a maximum oxygen content of 2,7 % (*m/m*)

5.6 Octane reporting

To prevent any misinterpretation in the reported results, the following reporting is recommended:

— *RON*m, being the measured Research Octane Number according to EN ISO 5164,

— *MON*m, being the measured Motor Octane Number according to EN ISO 5163,

— *RON* and *MON* being the Research and Motor Octane properties, respectively, shall be reported after correction of RONm and MONm according to Formulae (1) and (2):

$$RON = RONm - 0{,}2 \quad (1)$$

$$MON = MONm - 0{,}2 \quad (2)$$

5.7 Precision and dispute

5.7.1 Resolution of disputes

All test methods referred to in this European Standard include a precision statement. In cases of dispute, the procedures for resolving the dispute and interpretation of the results based on test method precision, described in EN ISO 4259, shall be used.

5.7.2 Arbitration test methods

In cases of dispute concerning motor octane number and research octane number, EN ISO 5163 and EN ISO 5164 respectively shall be used. For the determination of MON and RON, alternative methods to those indicated in Table 1 and Table 2 may also be used, provided that these methods originate from a recognised method series, and have a valid precision statement, derived in accordance with EN ISO 4259, which demonstrates precision at least equal to that of the referenced method. The test result, when using an alternative method, shall also have a demonstrable relationship to the result obtained when using the referenced method.

In cases of dispute concerning density, EN ISO 12185 shall be used.

In the case of dispute concerning sulfur content, either EN ISO 20846 or EN ISO 20884 shall be used.

In cases of dispute on hydrocarbon type content, EN ISO 22854 shall be used (see [10]).

In cases of dispute concerning benzene content, EN 238 cannot be used as method of dispute.

In cases of dispute concerning oxygen content, EN 13132 cannot be used as method for dispute.

In cases of dispute concerning methanol content, EN 1601 shall be used.

NOTE EN 1601 is applicable for samples containing > 15 % (V/V) of ethers using a dilution step lowering the amount of ethers to a value below 15 % (V/V).

In cases of dispute concerning oxygenates content, EN ISO 22854 shall be used.

Annex A
(normative)

Vapour pressure waiver

A.1 Vapour pressure waiver permitted

The permitted vapour pressure waiver for intermediate ethanol content between the values listed in Table A.1 shall be determined by a straight line interpolation between the ethanol content immediately above and that immediately below the intermediate value determined by the methods indicated in Table A.1.

Table A.1 — Vapour pressure waiver permitted for unleaded petrol containing bioethanol

Ethanol content EN 1601– EN 13132 — EN ISO 22854 [a] % (*V*/*V*)	**Vapour Pressure Waiver Permitted** EN 13016-1 kPa
0	0
1,0	3,7
2,0	6,0
3,0	7,2
4,0	7,8
5,0	8,0
6,0	8,0
7,0	7,9
8,0	7,9
9,0	7,8
10,0	7,8

[a] See also 5.7.2.

A.2 Guidance for checking compliance with the permitted waiver

To correctly sample for vapour pressure compliance, EN 14275 shall be used

To verify the compliance with the permitted waiver, the following approach shall be followed.

1) Measure the ethanol content according to the test methods listed in Table A.1.

2) Get the rounded waivers corresponding to the measured ethanol content.

3) Apply the waiver to the maximum vapour pressure limit of EN 228 of the Class A volatility class (60,0 kPa) as defined in Table 3 and obtain a new waiver limit.

4) Perform the vapour pressure measurement according to EN 13016-1, using the 1 l container procedure.

5) Compare the results obtained under 3 and 4.

6) The interpretation of results and the verification of the compliance shall be performed according to EN ISO 4259.

Bibliography

[1] Directive 98/70/EC of the European Parliament and of the Council of 13 October 1998 relating to the quality of petrol and diesel fuels and amending Council Directive 93/12/EEC

[2] Directive 2003/17/EC of the European Parliament and of the Council of 3 March 2003 amending Directive 98/70/EC relating to the quality of petrol and diesel fuels and amending Council Directive 93/12/EEC

[3] Directive 2009/30/EC of the European Parliament and of the Council of 23 April 2009 amending Directive 98/70/EC as regards the specification of petrol, diesel and gas oil and introducing a mechanism to monitor and reduce greenhouse gas emissions and amending Council Directive 1999/32/EC as regards the specification of fuel used by inland waterway vessels and repealing Directive 93/12/EEC

[4] Directive 2011/63/EU of the European Parliament and of the Council of 1 June 2011 amending, for the purpose of its adaptation to technical progress, Directive 98/70/EC of the European Parliament and of the Council relating to the quality of petrol and diesel fuels

[5] CEN/TR 16435, *Liquid petroleum products - Oxygenates blending in line with actual EN 228 requirements*

[6] CONCAWE report 08/03, *Guidelines for blending and handling motor gasoline containing up to 10 % V/V ethanol*, available from www.concawe.org.

[7] CEN/TR 15367-2, *Petroleum products - Guide for good housekeeping - Part 2: Automotive petrol fuels*

[8] CEN/TR 15367-3, *Petroleum products - Guide for good housekeeping - Part 3: Prevention of cross contamination*

[9] Method 13, *Determination of ^{14}C content in ethanol, Annex I of Commission Regulation (EC) No. 625/2003, of 2 April 2003, amending Regulation (EC) No 1623/2000 laying down detailed rules for implementing Council Regulation (EC) No 1493/1999 on the common organization of the market in wine with regards to market mechanism.*

[10] CEN/TR 15745, *Liquid petroleum products - Determination of hydrocarbon types and oxygenates via multidimensional gas chromatography method - Round Robin research report*

[11] [A1] Commission Directive 2014/77/EU of 10 June 2014 amending Annexes I and II of Directive 98/70/EC of the European Parliament and of the Council relating to the quality of petrol and diesel fuels [A1]

[12] [A1] Directive 2014/94/EU of the European Parliament and of the Council of 22 October 2014 on the deployment of alternative fuels infrastructure [A1]

[13] [A1] Directive 2009/28/EC of the European Parliament and of the Council of 23 April 2009 on the promotion of the use of energy from renewable sources and amending and subsequently repealing Directives 2001/77/EC and 2003/30/EC [A1]

STANDARD SHQIPTAR

SSH UNI 6579:2011

Lëndë djegëse të lëngëta për përdorim termik civil dhe industrial - Klasifikimi dhe karakteristikat

Liquid fuels for industrial and domestic thermal purposes - Classification and characteristics

DPS Drejtoria e Përgjithshme e Standardizimit
Adresa: Rruga "Mine Peza", 143/3,1014 Tiranë – Shqipëri,
Kutia Postare: 98,
Tel: + 355 (0) 4 222 62 55; Fax: + 355 (0) 4 224 71 77
E-mail: info@dps.gov.al

Hyrje

Drejtoria e Përgjithshme e Standardizimit, DPS, është Organi Kombëtar i Standardizimit në Republikën e Shqipërisë.

DPS harton, miraton dhe publikon standardet puro shqiptare, si dhe adopton dhe publikon standardet evropiane dhe ndërkombëtare, duke iu dhënë atyre statusin e Standardeve Shqiptare (SSH). Të njejtat kompetenca ka edhe për dokumentet e standardizimit.
Miratimi formal i tyre bëhet nga Drejtori i Përgjithshëm i DPS.

Standardet Shqiptare hartohen dhe adoptohen nga Komitetet Teknike (KT). Anëtarët e Komiteteve Teknike janë specialistë të subjekteve shtetërore dhe private nga fusha të ndryshme të ekonomisë që angazhohen vullnetarisht në këtë proces.

Standardi është adoptuar nga KT 19 dhe miratuar nga DPS si standard më 2011-11-24.

Standardi SSH UNI 6579:2011 botohet për herë të parë.

Ky standard është i njejtë me standardin dhe riprodhohet me lejen e:

Institutit Kombëtar Italian të Standardeve - UNI,
Via Sannio, 2
IT-20137 Milano, Italia

Standardet rishikohen kur është e nevojshme, prandaj është e domosdoshme që përdoruesi të marrë botimin e fundit si dhe amendamentet e tij, nëse ka të tilla.

Përmbajtja Faqe

STANDARD SHQIPTAR

Lëndë djegëse të lëngëta për përdorim termik civil dhe industrial – Klasifikimi dhe karakteristikat	S SH UNI 6579:2011 ICS: 75.160.20

Aprovuar në Komitetin Teknik 19
Miratuar më 24.11.2011

Ky standard ka statusin e Standardit Shqiptar.

Ky standard shqiptar ekziston vetëm në gjuhën shqipe.

Parathënie

Standardi S SH UNI 6579:2011 u përshtat nga Komiteti Teknik 19, "Produkte nafte, lubrifikantë dhe produkte që lidhen me to", sekretariatin e të cilit e mban DPS-ja.

Këtij standardi shqiptar duhet t'i jepet statusi i një standardi kombëtar, nëpërmjet një njoftimi, brenda muajit Maj 2012 dhe standardet kombëtare që bien në kundërshtim me të, duhen të shfuqizohen brenda muajit Maj 2012.

1 Fusha e zbatimit

Ky standard përcakton kërkesat dhe jep klasifikimin për një përdorim sa më të mirë të lëndëve djegëse të lëngëta, me origjinë nga nafta për përdorim termik civil dhe industrial.

Shënim: Për qëllimet e këtij standardi shqiptar, termat "% m" dhe "% vol." janë përdorur për të paraqitur përkatësisht përqindjen në masë dhe përqindjen në vëllim.

2 Standardet referuese

Ky standard shqiptar përmban përcaktime nga publikime të tjera, me anë të referencave të datuara ose të padatuara. Këto referenca normative janë cituar në vendet e nevojshme në tekst dhe publikimet janë renditur më poshtë. Referencat e datuara, amendamentet e mëtejshme ose rishikimet e çdo publikimi të tillë, zbatohen për këtë standard shqiptar vetëm kur ato përfshihen në të, me anë të amendamentit ose rishikimit. Për referencat e padatuara, zbatohet botimi më i fundit i publikimit të referuar (përfshirë amendamentet).

S SH EN 116 Lëndë djegëse për motorët diesel dhe pajisje ngrohëse shtëpiake – Përcaktimi i pikës së taposjes së filtrit në të ftohtë

S SH EN 12766-2	Produktet e naftës dhe vajrat e përdorur – Përcaktimi i BPK – ve dhe produktet në lidhje me 'to – Llogaritja e përmbajtjes së BPK
S SH EN 12766-3	Produktet e naftës dhe vajrat e përdorur – Përcaktimi i BPK – ve (derivatet e Benzenit të PoliKlorinuar) dhe produktet në lidhje me 'to – Pjesa 3: Përcaktimi dhe kuantifikimi (sasijimi) i përmbajtjes së terfenileve (difenilbenzeneve) të poliklorinuara (TPK) dhe toluen benzileve të poliklorinuara (TBPK) me anë të gazkromatografisë (GK) duke përdorur një dedektor (gjurmues) për kapjen e elektronit (DKE).
S SH EN 13131	Metodat e provës për naftën dhe produktet e saj - Produktet e lëngta të naftës - Përcaktimi i përmbajtjes së nikelit dhe vanadit - Metoda spektrometrike e absorbimit atomik
S SH EN 14078	Produktet e lëngshme të naftës - Përaktimi i metilestereve të acideve lyrore (FAME) në distilatet e mesme - Metoda e spektroskopisë me rreze infra të kuqe
S SH EN 14213	2003 Vajrat ngrohës - Metilesteret e acideve lyrore (FAME) - Kërkesat dhe metodat e provës
S SH EN ISO 2719	Përcaktimi i pikës së flakërimit – Metoda Pensky-Martens me kupë të mbyllur (kroxholl) (ISO 2719:2002)
S SH EN ISO 2592	Përcaktimi i pikës së flakërimit – Metoda Cleveland me kupë të hapur (kroxhol) (ASTM D-92)
S SH EN ISO 3104	Produkte të naftës – Lëngjet transparentë dhe të errët – Përcaktimi i vizkozitetit kinematik dhe llogaritja e viskozitetit dinamik. (ASTM D-445-11a)
ASTM D1665-98	Përcaktimi i viskozitetit specifik Engler në produktet e rënda
S SH EN ISO 3170	Lëngjet e naftës – Marja e mostrës me dorë
S SH EN ISO 3171	Lëngjet e naftës – Marja automatike e mostrës me tubacion (ISO 3171:1988).
S SH EN ISO 3405	Produkte të naftës – Përcaktimi i karakteristikave të distilimit (IS0 3405:2000). (ASTM D-86)
S SH EN ISO 3675	Nafta bruto dhe produktet e lëngëta të naftës – Përcaktimi laboratorik i densitetit –Metoda me hidrometër(ISO 3675:1998).
S SH EN ISO 3735	Naftë bruto dhe mazut - Përcaktimi i mbetjes - Metoda e ekstraktimit

S SH EN ISO 4259	Produkte të naftës – Përcaktimi dhe zbatimi i të dhënave të sakta në lidhje me metodat e provës (ISO 4259:1992, përfshirë Korrigjimin 1:1993)
S SH EN ISO 6245	Produkte të naftës – Përcaktimi i hirit (ISO 6245:2001)
S SH EN ISO 8754	Produkte nafte - Përcaktimi i përmbajtjes së squfurit – Spektrometria fluoreshente e shpërndarjes së energjise me reze x (ASTM D 4294-02)
S SH EN ISO 20884	Produkte nafte - Përcaktimi i përmbajtjes së squfurit në lëndët djegëse të lëngëta për automjete - Spektrometria fluoreshente me rreze X në shpërndarjen e gjatësisë së vales (ASTM D2622)
S SH EN ISO 10370	Produktet e naftës - Përcaktimi i mbetjes së karbonit - Metoda mikro
S SH ISO 3016	Produkte nafte - Përcaktimi i pikës së rrjedhjes
S SH ISO 3733	Produkte nafte dhe materiale bituminoze - Percaktimi ujit - Metoda e distilimit
S SH ISO 3734	Produktet e naftes - Percaktimi i ujit dhe mbeturinave mekanike ne mazutet e naftes – Metoda me centrifuge
ASTM D 974:	Produkte të naftës – Përcaktimi i aciditetit dhe bazicitetit me metodën e titrimit të ngjyrës së indikatorit.

3 Marrja e mostrës

Mostrat duhen të merren siç përshkruhet në standardin S SH EN ISO 3170 ose në standardin S SH EN ISO 3171 dhe/ose në përputhje me kërkesat e standardeve kombëtare ose rregulloret për marrjen e mostrës të lëndës djegëse për ngrohje industriale dhe shtëpiake.

Nga pikëpamja e ndjeshmërisë së disa metodave të provës që referohen në këtë standard shqiptar, vëmendje e veçantë duhet t'i kushtohet përputhshmërisë të çdo udhëzimi për enët e marrjes së mostrës të cilat përfshihen në standardin e metodës së provës.

4 Kërkesat dhe metodat e provës

4.1 Ngjyruesit dhe gjurmuesit

Është i lejueshëm përdorimi i ngjyruesve dhe/ose i gjurmuesve. Duhet të përdoren ngjyrues dhe gjurmues sipas ligjeve dhe akteve nënligjore në fuqi në këtë fushë.

4.2 Shtesat

Lejohet përdorimi i shtesave me qëllim përmirësimin e cilësia së lëndës djegëse.
Rekomandohet përdorimin aditivëve të përshtatshëm, pa efekte anësore të njohur, në sasi të duhur.

4.3.1 Esteret metilik të acideve yndyror

Lejohet përdorimi i estereve metilik i acideve yndyror (FAME) të përzier me gazoil ose me vajra të djegshëm. FAME e përdorur duhet të jetë në përputhje me standardin S SH EN 14213.

4.4 Kërkesa të përgjithshme të zbatueshme dhe metodat e provës në lidhje me to

Kur i nënshtrohen provave sipas metodave të treguara ne tabelen 1, lëndët djegëse dhe përzierjet e mundëshme me FAME (shih pikën 4.3) duhet të kënaqin kufijtë e treguar në tabelën 1.

Në rastin kur përmbajtja e FAME në gazoil ose ne vajin e djegshëm është më e madhe se 105 V/V) për përcaktimin e përmbajtjes së squfurit duhet të përdoret metoda e përcaktuar në standardin S SH EN ISO 14596

Për përcaktimin e përmbajtjes së FAME në gazoil duhet të përdoret metoda e përcaktuar në standardin S SH EN ISO 14078.

4.5 Saktësia dhe dyshimi

Të gjitha metodat e provave të cilave ju referohet ky standard përfshijnë të dhëna të saktësisë në përputhje me standardin S SH EN ISO 4259. Në raste dyshimi, për zgjidhjen e mosmarrëveshjes dhe interpretimin e rezultateve të bazuara në saktësinë e metodës së provës duhen të përdoren procedurat e përshkruara në S SH EN ISO 4259:2006.

Tabela 1 – Klasifikimi i lëndëve djegëse, kërkesat dhe metodat e provave

Lloji i lëngës djegëse	Njësia	Vajguri (kerosinë)	Gazoil ≤0,1	Gazoil >0,1	Lende djegese te lengeta te renda te naftes(heavy fuel oil)		Metodat e provës
					Solar	Mazut	
	Njësia	A	B	C	D	E	
Kartakteristikat							
Pika flakërimit	^{0}C	≥28	>55	>55	>65	>80	S SH EN ISO 2719 ASTM D-92
Indeksi i cetanit			≥42				
Masa vëllimore në 15^{0}C	Kg/m^3	770 deri 830	815 - 875	815 - 875			S SH EN ISO 3675
Viskoziteti në 40^{0}C në 50^{0}C në 50^{0}C në 100^{0}C në 100^{0}C	 mm^2/s mm^2/s ^{0}E mm^2/s ^{0}E		 2,0-7,4 -	 2,0-7,4 -	 - 21-90 <12 ≤2	 - >90 >12 >2	S SH EN ISO 3104 ASTM D-445 ASTM D1665
Distilimi në 150^{0}C në 210^{0}C në 250^{0}C në 300^{0}C në 350^{0}C	 %)v/v) %)v/v) %)v/v) %)v/v) %)v/v)	 - <90 ≥65	 ≤2[1] <65 ≥85	 ≤2[1] <60 <85			S SH EN ISO3405 ASTM D 86
Uji dhe mbetjet	%)v/v)	≤0,05	≤0,05	≤0,05			S SH ISO 3734
Uji	%)v/v)	shënja	shënja	shënja	≤2	shënja	S SH ISO 3733
Mbetjet	%(m/m)				≤0,5	≤0,5	S SH ISO 3735
Hiri	%(m/m)				≤0,1	≤0,2	S SH EN ISO 6245
korrozioni	vlerësim	1a	1a	1a			S SH EN ISO 2160
Pika e turbullimit	°C		≤ 0	≤ 0			S SH ISO 3016
Squfuri	%(m/m)	≤0,2	≤0,1	≤1	≤5	≤7	S SH EN ISO 20884
Përmbajtja e koksit	%(m/m)				≤15	≤15	S SH EN ISO 10370
Nikel+Vanad	mg/kg	≤15	≤15	≤15	≤180	≤230	S SH EN 13131
PCB	mg/kg	<4	<4	<4	<4	<4	S SH EN 12766-2
PCT	mg/kg	<10	<10	<10	<10	<10	S SH EN 12766-3
Fuqia kalorifike	MJ/kg				≥40	≥40	S SH 3745
Ngjyra(2)		po	po	po			

Shënimi (1) :nuk është i nevojshëm kur pika e flakërimit është më e madhe ose e barabartë me 65^{0}C
Shënimi (2): është i detyrueshëm ngjyrosja,për produktet (A,B,C), sipas ligjeve dhe akteve nënligjore në fuqi

STANDARD SHQIPTAR

SSH EN 589:2008+A1:2012

Lëndë djegëse për automjete, për përdorim shtëpiak dhe industrial - GLN (Mishelë) - Kërkesat dhe metodat e provës

Automotive fuels - LPG - Requirements and test methods

DPS Drejtoria e Përgjithshme e Standardizimit
Adresa: Rruga "Mine Peza", 143/3,1014 Tiranë – Shqipëri,
Kutia Postare: 98,
Tel: + 355 (0) 4 222 62 55; Fax: + 355 (0) 4 224 71 77
E-mail: info@dps.gov.al

Hyrje

Drejtoria e Përgjithshme e Standardizimit, DPS, është Organi Kombëtar i Standardizimit në Republikën e Shqipërisë.

DPS harton, miraton dhe publikon standardet puro shqiptare, si dhe adopton dhe publikon standardet evropiane dhe ndërkombëtare, duke iu dhënë atyre statusin e Standardeve Shqiptare (SSH). Të njejtat kompetenca ka edhe për dokumentet e standardizimit.
Miratimi formal i tyre bëhet nga Drejtori i Përgjithshëm i DPS.

Standardet Shqiptare hartohen dhe adoptohen nga Komitetet Teknike (KT). Anëtarët e Komiteteve Teknike janë specialistë të subjekteve shtetërore dhe private nga fusha të ndryshme të ekonomisë që angazhohen vullnetarisht në këtë proces.

Standardi EN 589:2008+A1:2012 është hartuar nga KT 19 dhe miratuar nga DPS si standard më 2012-09-27.

Standardi SSH EN 589:2008+A1:2012 botohet për herë të parë.

Standardet rishikohen kur është e nevojshme, prandaj është e domosdoshme që përdoruesi të marrë botimin e fundit si dhe amendamentet e tij, nëse ka të tilla.

EUROPEAN STANDARD

NORME EUROPÉENNE

EUROPÄISCHE NORM

EN 589:2008+A1

March 2012

ICS 75.160.20

Supersedes EN 589:2008

English Version

Automotive fuels - LPG - Requirements and test methods

Carburants pour automobiles - GPL - Exigences et méthodes d'essai

Kraftstoffe für Kraftfahrzeuge - Flüssiggas - Anforderungen und Prüfverfahren

This European Standard was approved by CEN on 29 June 2008 and includes Amendment 1 approved by CEN on 16 January 2012.

CEN members are bound to comply with the CEN/CENELEC Internal Regulations which stipulate the conditions for giving this European Standard the status of a national standard without any alteration. Up-to-date lists and bibliographical references concerning such national standards may be obtained on application to the CEN-CENELEC Management Centre or to any CEN member.

This European Standard exists in three official versions (English, French, German). A version in any other language made by translation under the responsibility of a CEN member into its own language and notified to the CEN-CENELEC Management Centre has the same status as the official versions.

CEN members are the national standards bodies of Austria, Belgium, Bulgaria, Croatia, Cyprus, Czech Republic, Denmark, Estonia, Finland, France, Germany, Greece, Hungary, Iceland, Ireland, Italy, Latvia, Lithuania, Luxembourg, Malta, Netherlands, Norway, Poland, Portugal, Romania, Slovakia, Slovenia, Spain, Sweden, Switzerland, Turkey and United Kingdom.

EUROPEAN COMMITTEE FOR STANDARDIZATION
COMITÉ EUROPÉEN DE NORMALISATION
EUROPÄISCHES KOMITEE FÜR NORMUNG

Management Centre: Avenue Marnix 17, B-1000 Brussels

Ref. No. EN 589:2008+A1:2012: E

Contents

Page

Foreword

This document (EN 589:2008+A1:2012) has been prepared by Technical Committee CEN/TC 19 "Petroleum products, lubricants and related products", the secretariat of which is held by NEN.

This European Standard shall be given the status of a national standard, either by publication of an identical text or by endorsement, at the latest by September 2012, and conflicting national standards shall be withdrawn at the latest by September 2012.

Attention is drawn to the possibility that some of the elements of this document may be the subject of patent rights. CEN [and/or CENELEC] shall not be held responsible for identifying any or all such patent rights.

This document includes Amendment 1, approved by CEN on 2012-01-16.

This document supersedes [A1] EN 589:2008 [A1].

The start and finish of text introduced or altered by amendment is indicated in the text by tags [A1] [A1].

Differences between this document and EN 589:2004 include:

— introduction of two new test methods for residues replacing the formerly applied EN ISO 13757 [1],

— introduction of a revised specification of residue content,

— introduction of a new test method for free water detection,

— update of the values in Table C.1 in terms of the number of digits.

Next, the Technical Corrigendum on the 2004 edition on Table B.1, as published in 2005, has been incorporated.

According to the CEN/CENELEC Internal Regulations, the national standards organizations of the following countries are bound to implement this European Standard: Austria, Belgium, Bulgaria, Croatia, Cyprus, Czech Republic, Denmark, Estonia, Finland, France, Germany, Greece, Hungary, Iceland, Ireland, Italy, Latvia, Lithuania, Luxembourg, Malta, Netherlands, Norway, Poland, Portugal, Romania, Slovakia, Slovenia, Spain, Sweden, Switzerland, Turkey and United Kingdom.

1 Scope

This European Standard specifies requirements and test methods for marketed and delivered automotive LPG (Liquefied Petroleum Gas). It is applicable to automotive LPG for use in LPG engine vehicles designed to run on automotive LPG.

NOTE: For the purposes of this European Standard, the term "% (*V/V*)" is used to represent the volume fraction.

WARNING - Attention is drawn to the risk of fire and explosion when handling LPG and to the hazard to health which arises through inhalation of excessive amounts of LPG.

LPG is a highly volatile hydrocarbon liquid which is normally stored under pressure. If the pressure is released large volumes of gas will be produced which form flammable mixtures with air over the range of approximately 2 % (*V/V*) to 10 % (*V/V*). This European Standard involves the sampling, handling and testing of LPG. All procedures should be conducted away from sources of ignition such as naked flames, unprotected electrical equipment and electrostatic hazards. Testing should be performed as far as practicable under an electrically-safe ventilation hood.

LPG in liquid form can cause cold burns to the skin. Protective clothing such as gloves and goggles should be worn if contact with the skin is likely to occur.

Unnecessary inhalation of LPG vapour should be avoided. The operator should not be exposed to atmospheres containing more than 1 800 mg/m^3 over an 8 h time-weighted average (TWA) reference period, or more than 2 250 mg/m^3 over a short term, 10 min reference period. One of the tests described in this European Standard involves the operator inhaling a mixture of air and LPG vapour. Particular attention is drawn to the cautionary statement provided in A.1, where this method is referred to.

2 Normative references

The following referenced documents are indispensable for the application of this document. For dated references, only the edition cited applies. For undated references, the latest edition of the referenced document (including any amendments) applies.

EN 15469:2007, *Petroleum products – Test method for free water in liquefied petroleum gas by visual inspection*

EN 15470:2007, *Liquefied petroleum gases – Determination of dissolved residues - High temperature Gas chromatographic method*

EN 15471:2007, *Liquefied petroleum gases – Determination of dissolved residues - High temperature gravimetric method*

EN ISO 4256:1998, *Liquefied petroleum gases - Determination of gauge vapour pressure - LPG method (ISO 4256:1996)*

EN ISO 4257:2001, *Liquefied petroleum gases - Method of sampling (ISO 4257:2001)*

EN ISO 4259:2006, *Petroleum products - Determination and application of precision data in relation to methods of test (ISO 4259:2006)*

EN ISO 6251:1998, *Liquefied petroleum gases - Corrosiveness to copper - Copper strip test (ISO 6251:1996)*

EN ISO 8819:1995, *Liquefied petroleum gases - Detection of hydrogen sulfide - Lead acetate method (ISO 8819:1993)*

EN ISO 8973:1999, *Liquefied petroleum gases - Calculation method for density and vapour pressure (ISO 8973:1997)*

[A1] *deleted text* [A1]

EN 27941:1993, *Commercial propane and butane - Analysis by gas chromatography (ISO 7941:1988)*

ASTM D 3246-05, *Standard test method for sulfur in petroleum gas by oxidative microcoulometry*

ASTM D 6667-04, *Standard test method for determination of total volatile sulfur in gaseous hydrocarbons and liquefied petroleum gases by ultraviolet fluorescence*

3 Terms and definitions

For the purposes of this document, the following terms and definitions apply.

3.1
liquefied petroleum gas (LPG)
petroleum gas that can be stored and/or handled in the liquid phase under moderate conditions of pressure and at ambient temperature, consisting predominantly of propane, butanes, with small proportions of propene, butenes and pentanes/pentenes

4 Sampling

Samples shall be taken as described in EN ISO 4257 and/or in accordance with the requirements of national standards or regulations for the sampling of automotive LPG. The national requirements shall be set out in detail or shall be referred to by reference in a national annex to this European Standard.

In view of the sensitivity of some of the test methods referred to in this European Standard, particular attention shall be paid to compliance with any guidance on sampling containers which is included in the test method standard.

NOTE 1 It is important that the sampling procedure is followed in detail in order to avoid evaporation losses.

NOTE 2 Before sampling from the dispenser hose, 20 l of product should be pumped or recirculated, in order to obtain a representative sample.

5 Pump marking

Information to be marked on dispensing pumps used for delivering automotive LPG, and the dimensions of the mark shall be in accordance with the requirements of national standards or regulations for the marking of pumps for automotive LPG.

Such requirements shall be set out in detail or shall be referred to by reference in a national annex to this European Standard.

6 Requirements and test methods

6.1 General

When tested by the methods of test given in Table 1, automotive LPG fuel shall comply with the limiting requirements specified in that Table.

For the minimum vapour pressure, five grades, A, B, C, D and E are given to allow for seasonal limits to be set nationally for each period of the year. In a national annex to this European Standard, each country shall indicate which grade(s) it adopts to achieve a minimum vapour pressure of 150 kPa (gauge) throughout the entire year and shall detail the date range in which the selected grade applies.

Table 1 — Requirements and test methods

Property	Unit	Limits		Test method [a]
		Minimum	Maximum	(See 2. Normative references)
Motor octane number, MON		89,0		Annex B
Total dienes content (including 1.3 butadiene)	mole %		0,5	EN 27941
Hydrogen sulphide		negative		EN ISO 8819
Total sulfur content [b] (after stenching)	mg/kg		50	[A1] *deleted text* [A1] ASTM D 3246 ASTM D 6667
Copper strip corrosion (1 h at 40 °C)	rating	class 1		EN ISO 6251
Evaporation residue	mg/kg		60	EN 15470 EN 15471
Vapour pressure, gauge, at 40 °C [c]	kPa		1 550	EN ISO 4256 EN ISO 8973 and Annex C
Vapour pressure, gauge, min. 150 kPa at a temperature of: [d, e] - for grade A - for grade B - for grade C - for grade D - for grade E	°C		 - 10 - 5 0 + 10 + 20	EN ISO 8973 and Annex C
Water content [f]		Pass		EN 15469
Odour		Unpleasant and distinctive at 20 % LFL		See 6.3 and Annex A

[a] See also 6.5.1.
[b] See also 6.5.2.
[c] See also 6.5.3.
[d] For the purpose of this standard EN ISO 8973 together with Annex C shall be applied at the indicated temperatures. For internal routine quality control purposes, the values as given in the informative Annex D may also be used.
[e] See also 6.1.
[f] See also 6.2.

6.2 Water content

Liquefied petroleum gases for automotive purposes shall not contain free water at 0 °C and at the saturated vapour pressure on visual inspection.

NOTE 1 For propane rich mixtures with a minimum of 60 % propane, compliance with EN ISO 13758 [1] equally satisfies this requirement.

For operational purposes it is allowed to add up to 2 000 mg/kg methanol. No other antifreeze agents shall be added.

6.3 Odour

When tested in accordance with the procedure described in Annex A, the odour of the gas shall be characteristic (i.e. distinctive and unpleasant), detectable at a concentration in air of 20 % of the lower flammability limit.

NOTE Unpleasant being subjective, the odour should be a caution and inviting to the user to search for the leak.

6.4 Density

If a density report is required, EN ISO 3993 [3] or EN ISO 8973 are recommended.

6.5 Precision and dispute

6.5.1 All test methods referred to in this European Standard include a precision statement. In cases of dispute, the procedures for resolving the dispute and interpretation of the results based on test method precision, described in EN ISO 4259, shall be used.

6.5.2 In cases of dispute concerning the total sulfur content, ASTM D 6667 shall be used.

6.5.3 In cases of dispute concerning the vapour pressure, EN ISO 4256 shall be used.

Annex A
(normative)

Test method for odour of LPG

A.1 Introduction

This Annex describes a method for assessing the odour of commercial LPG whatever the odour is due to the presence of unsaturated hydrocarbons or an odour imparted by the addition of odorants.

WARNING —In order to minimize the exposure of personnel conducting the odour test, it is strongly recommended that the test should only be performed when it has been ascertained that LPG already meets the other specification limits detailed in Table 1 of this European Standard. The test involves the operator inhaling a mixture of LPG vapour and air. There is a risk that the short-term and/or long-term (8 h TWA reference period) occupational exposure limits for substances contained in the LPG may be exceeded. The operator should consult relevant safety and health regulations and ensure that exposure during the sampling, handling and testing of LPG does not exceed the prescribed limits.

As a guide, and provided the LPG being tested complies with the quality requirements listed in Table 1 of this European Standard, an operator will normally remain within recommended occupational exposure limits provided inhalation of the LPG/air mixture does not exceed three 10 second periods during each test and not more than two tests per hour are performed in the course of an 8-hour working day. This guidance only takes account of the operator's exposure whilst conducting odour tests. Other potential exposures should be assessed in order to estimate total exposure.

A.2 Principle

A sample of liquid gas is completely vaporized and diluted with purified air so that the mixture contains the gas at a concentration of 20 % of the lower limit of its flammability in air. The odour of the gaseous mixture is assessed by at least three observers.

NOTE The lower limits of flammability in air may be taken as:
- butane 1,9 % (V/V);
- propane 2,4 % (V/V).

A.3 Material

Activated charcoal, particle size 1,18 mm to 1,70 mm, for purifying the air stream.

A.4 Apparatus

The apparatus is shown diagrammatically in Figure A.1 and consists of the parts detailed in A.4.1 to A.4.5.

A.4.1 Air purifying column, consisting of a drying tower of approximately 200 ml capacity.

A.4.2 Flowmeter, such as one operating on the floating element principle, for air; range 5 l/min to 15 l/min.

A.4.3 Flowmeter, such as one operating on the floating element principle, for gas; range 5 ml/min to 150 ml/min.

A.4.4 Gas mixing bulb, 30 mm in diameter with a jet 4 mm in diameter.

A.4.5 Glass funnel, diameter 75 mm.

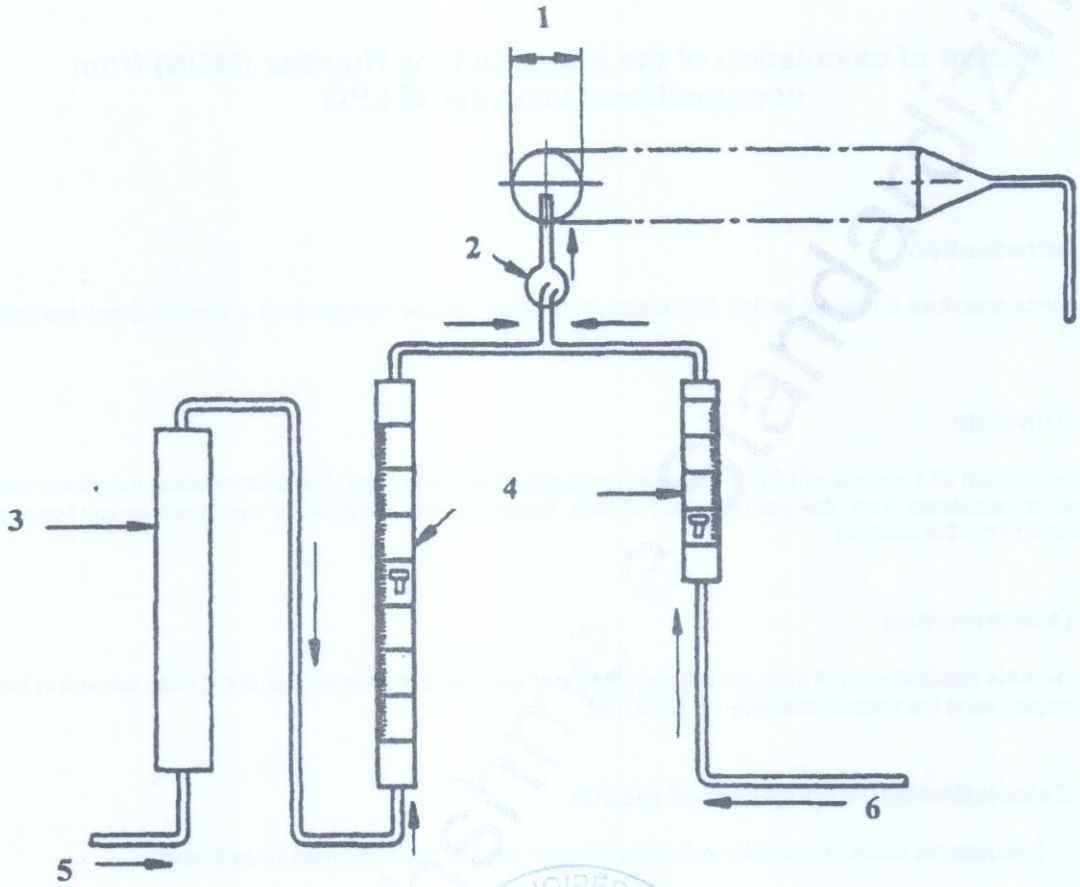

Key

1	∅ 75 Glass funnel	4	Flowmeters
2	Mixing bulb	5	Air
3	Air purifying column	6	Stenched gas

Figure A.1 — Apparatus for assessing odour of LPG

A.5 Procedure

Pass air through the air purifying column (A.4.1) at the specified rate as measured by the air flowmeter (A.4.2). The air flow rate for propane shall be 8,5 l/min and that for butane shall be 10,5 l/min.

Place the nose inside the rim of the funnel (A.4.5) and inhale gently; check that the air is odourless.

Pass the stenched gas through the gas flowmeter (A.4.3) at a rate of 40 ml/min. Assess the odour of the gas-air mixture using at least three observers.

A.6 Expression of results

If the odour is judged to be distinctive and unpleasant by all observers, the batch, which the sample represents, shall be reported as complying with EN 589.

Annex B
(normative)

Method of calculation of the Motor Octane Number (MON) from compositional analysis of LPG

B.1 Introduction

This Annex describes a method for the calculation of the motor octane number from a compositional analysis of LPG.

B.2 Principle

The composition of a sample of LPG is obtained using gas chromatography. The motor octane number of the sample is calculated from the partial motor octane factors of the constituents and their concentrations determined from the analysis.

B.3 Determination

Determine the concentration of each constituent present at a concentration in excess of 0,1 mole percent in the gas sample, using the method described in EN 27941.

B.4 Calculation and expression of results

B.4.1 Calculate the partial motor octane number for each component in the mixture as follows:

$$\text{Partial octane number} = M \times C \qquad \text{(B.1)}$$

where

M is the motor octane factor of specific component (see Table B.1), in the same units as used for C;

C is the fraction of specific component in the mixture, either in molar, mass or volume percentage.

NOTE The factors for motor octane number in Table B.1 are empirical values to be used only in the calculation procedures described in this Annex.

In cases of dispute the molar factors shall be used.

B.4.2 Add the partial motor octane numbers for all of the components determined and round the sum down to the nearest 0,1.

B.5 Reporting

Report the total (B.4.2) as the LPG motor octane number of the sample.

Table B.1 — Factors for determining the Motor Octane Number of LPG

Component	Motor octane number factor, *M*		
	Molar	Mass	Volume
Propane (+ C2)	95,4	95,9	95,6
Propene	83,9	82,9	83,1
Butane (+ C5)	89,0	88,9	88,9
2-Methylpropane (Isobutane)	97,2	97,1	97,1
Butenes	75,8	76,8	75,7

Annex C
(normative)

Absolute vapour pressure blending factors (kPa)

This Annex describes factors for the calculation of the absolute vapour pressure of liquefied petroleum gas. The method of calculation as given in EN ISO 8973 shall be used. [1)]

Table C.1 — Absolute Vapour Pressure Blending Factors

Component	Absolute Vapour Pressure Blending Factors (kPa) at Temperature (°C)					
	-10	-5	0	10	20	40
Methane	21 334	22 742	24 211	27 333	30 707	38 230
Ethane	1 873	2 128	2 407	3 040	3 781	5 613
Ethylene	3 348	3 737	4 159	5 101	6 184	8 805
Propane	346	405	472	630	826	1 353
Propylene	437	510	591	785	1 024	1 661
Butane	71,26	86,64	104,5	149,2	207,6	376,9
Isobutane	109,9	132,3	158,1	221,4	302,7	531
1-Butene	87,91	106,8	128,8	183,4	254,4	457
Isobutene	90,17	109,5	131,9	187,6	259,9	466
Cis-2-Butene	59,63	73,11	88,94	126,7	181,5	336,5
Trans-2-Butene	67,13	81,90	99,16	142,3	199,1	364,8
1,2-Butadiene	43,65	54,08	66,49	98,26	141,3	272,2
1,3-Butadiene	81,55	99,45	120,3	172,2	240,2	436
Pentane	15,23	19,41	24,48	37,85	56,53	115,5
Isopentane	21,98	27,68	34,52	52,25	76,57	151,3
1-Pentene	19,75	25,00	31,33	47,85	70,67	141,5

1) Source of data: the vapour pressure blending factors of components present in liquefied petroleum gas, as indicated in the table, are primarily calculated using so-called Antoine coefficients as published in [4].

Annex D
(informative)

Seasonal gauge vapour pressure limits at 40 °C

Table D.1 — Seasonal gauge vapour pressure limits at 40 °C

Grade	Minimum[a] (kPa)	Equivalent to 150 kPa at (°C)
A	950	-10
B	800	-5
C	700	0
D	500	+ 10
E	275	+ 20

[a] These vapour pressures are calculated using the values given in EN ISO 8973 and are for internal routine quality control purposes only.

Bibliography

[1] EN ISO 13757:1996, *Liquefied petroleum gases - Determination of oily residues - High-temperature method (ISO 13757:1996)*

[2] EN ISO 13758:1996, *Liquefied petroleum gases - Assessment of the dryness of propane - Valve freeze method (ISO 13758:1996)*

[3] EN ISO 3993:1995, *Liquefied petroleum gas and light hydrocarbons - Determination of density or relative density - Pressure hydrometer method (ISO 3993:1984)*

[4] *The Properties of Gases and Liquids,* REID, R.C., PAUSNITZ, J.M. and SHERWOOD,T.K., 3rd ed., 1977