Projekti per Objektin / Design for the Object :

"Studim Projektim – Zgjerimi i segmentit rrugor dalje Elbasan-Prrenjas-Qafe Thane", Faza II /

"Design Study of road segment exit Elbasan-Prrenjas-Qafe Thane" Phase II

Projekt Zbatim / Detailed Design

"VEPRAT E ARTIT" / "MINOR STRUCTURES"

MARS 2023 / MARCH 2023

HMK-CONSULTING SH.P.K
Konsulence-Projektim-Mbikqyrje

InfraKonsult

Address: Rr. "Qemal Stafa"; P.25; Ap. 4,hyrja 4, perballe Qendres Lincoln

Mob:+355 (0)68 90 10 844 / +355 (0)69 40 17 013

E-mail: infrakonsult@yahoo.com

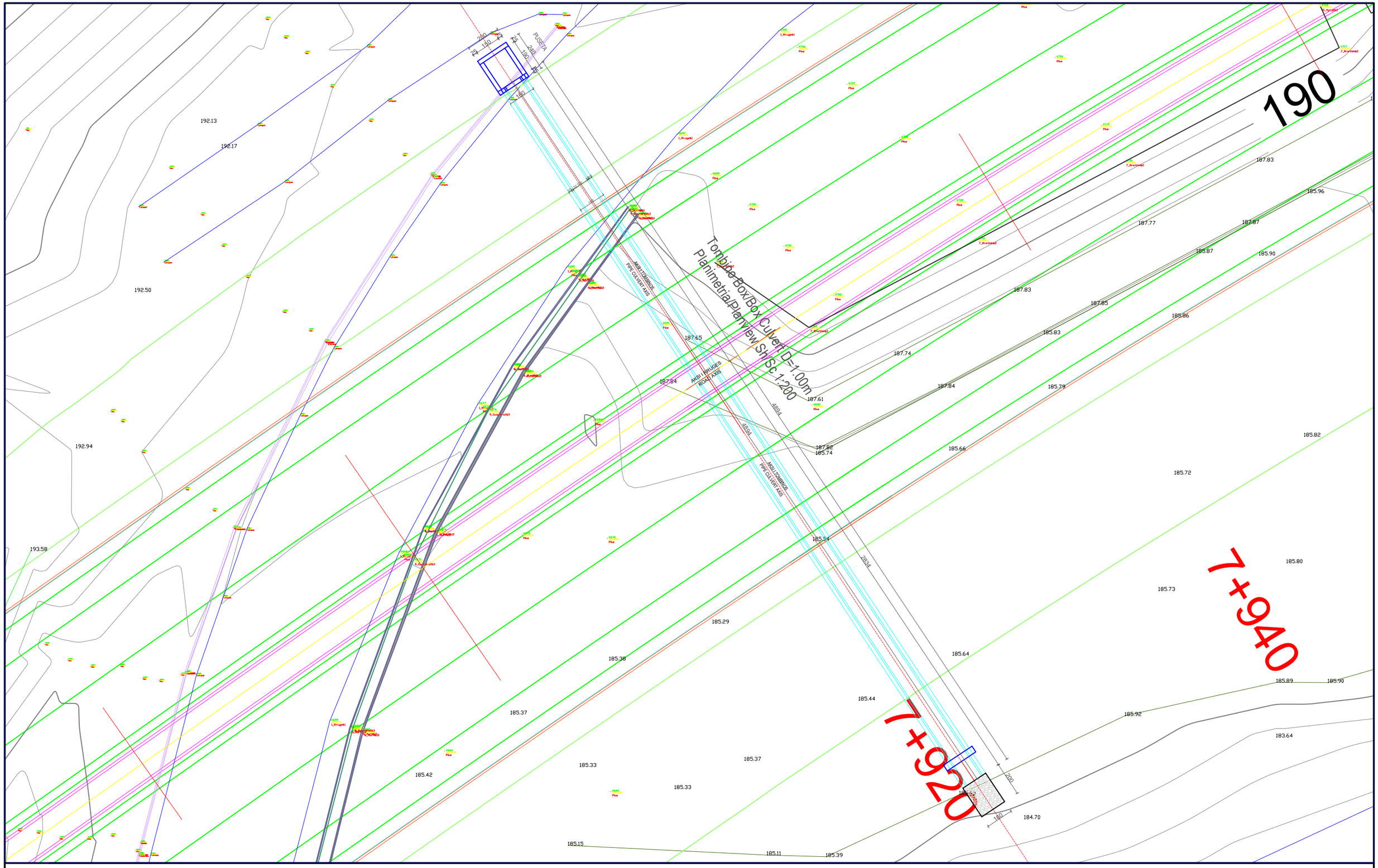

INVESTITORI / INVESTOR

"Autoriteti Rrugor Shqiptar"

Address: Rr. "Sami Frasheri", Nr 33, Tirane

Mob: 04 222 3600
E-mail: info@arrsh.gov.al

JV: "InfraKonsult" shpk & "HMK-Consulting" shpk

"Studim Projektim - Zgjerimi i segmentit rrugor dalje Elbasan-Prrenjas-Qafe Thane", (Faza II) / "Design Study of road segment exit Elbasan-Prrenjas-Qafe Thane" (Phase II)

PLANIMETRIA E TOMBINONOS-Km 7+920
PILANVIEW CULVERT - Km 7+920

FAZA - PROJEKT ZBATIM
PHASE - DETAIL DESIGN

SHKALLA / SCALE	1:200 / 1:200	Data:Mars 2023 / Date: March 2023
VIZATIMI Nr: / PAGE No:	E (0)	

PROJEKTUES:
DESIGN ENGINEERS:

Ing./Eng. Sokol METOJA
Ing./Eng. Redi STRUGA
Ing./Eng. Orgest MËRTIKA

Tombino Box/Box Culvert D=1.00m
Planimetria/Planview Sh/Sc 1:200

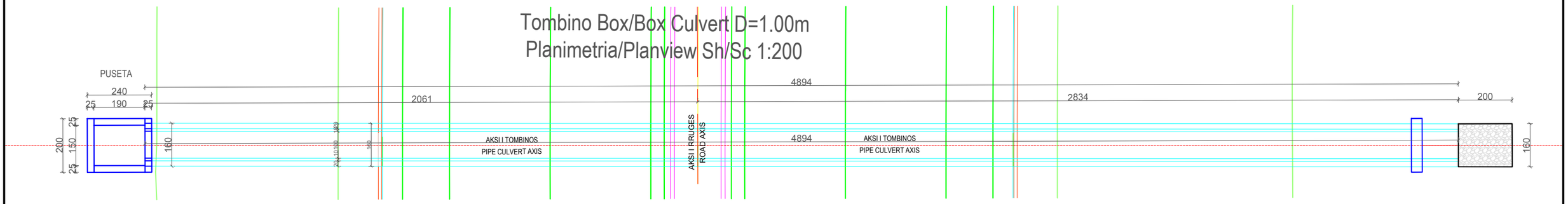

Prerje A-A Sh 1:200
Section A-A Sc 1:200

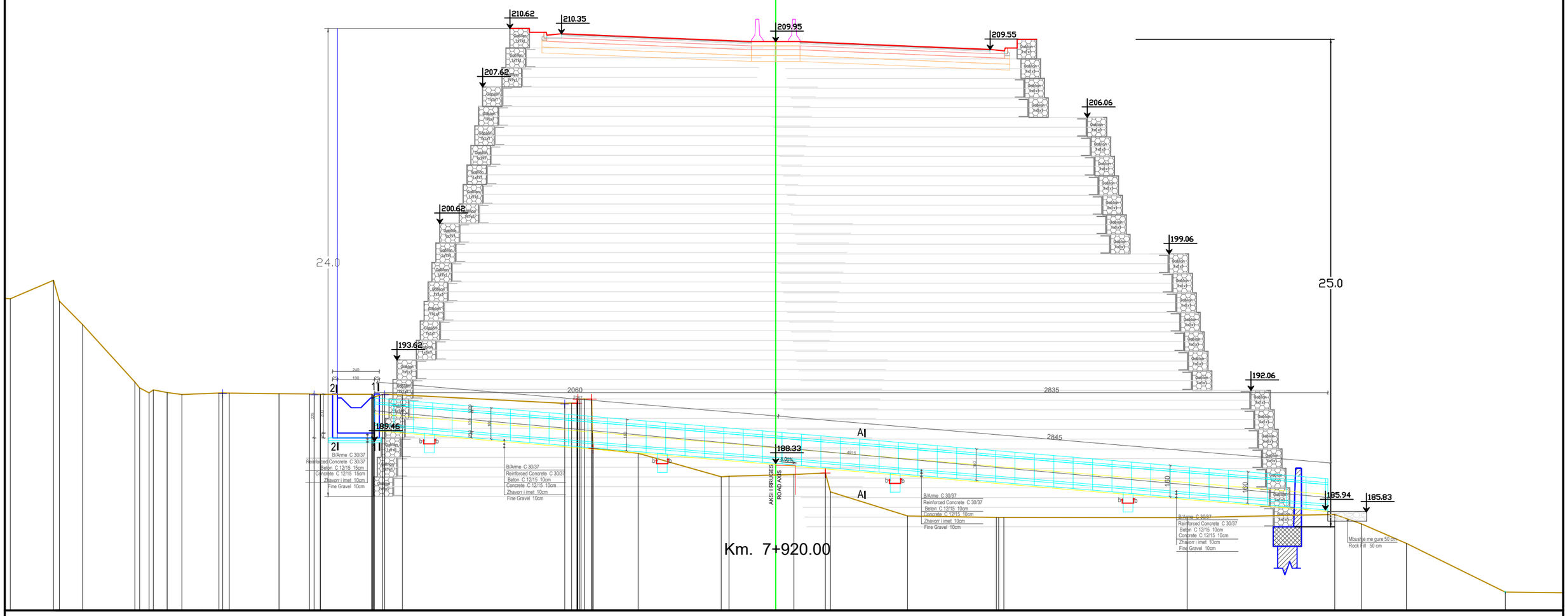

INVESTITORI / INVESTOR
"Autoriteti Rrugor Shqiptar"

Address: Rr. "Sami Frasheri", Nr 33, Tirane

Mob: 04 222 3600
E-mail: info@arrsh.gov.al

JV: "InfraKonsult" shpk & "HMK-Consulting" shpk

"Studim Projektim - Zgjerimi i segmentit rrugor dalje Elbasan-Prrenjas-Qafe Thane", (Faza II) / "Design Study of road segment exit Elbasan-Prrenjas-Qafe Thane" (Phase II)

TOMBINO RRETHORE D=1.0m-Km +7+920 / CIRCULAR CULVERT D=1.0m- Km +7+920

FAZA - PROJEKT ZBATIM
PHASE - DETAIL DESIGN

SHKALLA / SCALE	1:200,100 / 1:200,100	Data:Mars 2023 / Date: March 2023
VIZATIMI / PAGE	Nr: / No: E (1)	

PROJEKTUES / DESIGN ENGINEERS:
Ing./Eng. Sokol METOJA
Ing./Eng. Redi STRUGA
Ing./Eng. Orgest MËRTIKA

PRERJE E PUSETES sh.1:50/
MANHOLE CROSS SECTION sc.1:50/

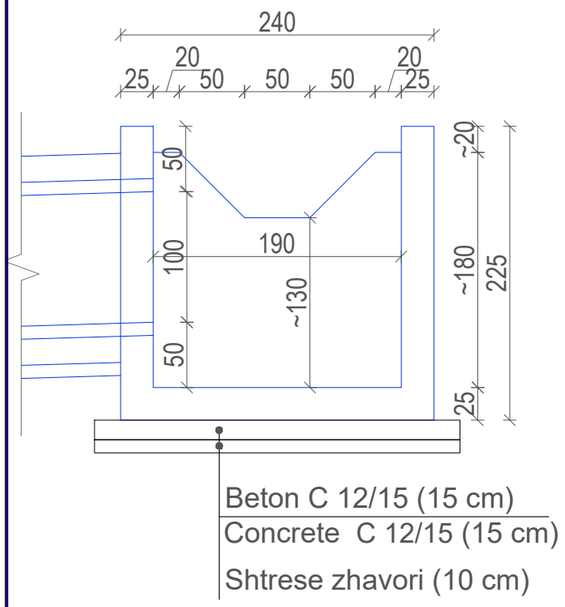

PLANIMETRI E PUSETES sh.1:50
MANHOLE PLANVIEW sc.1:50

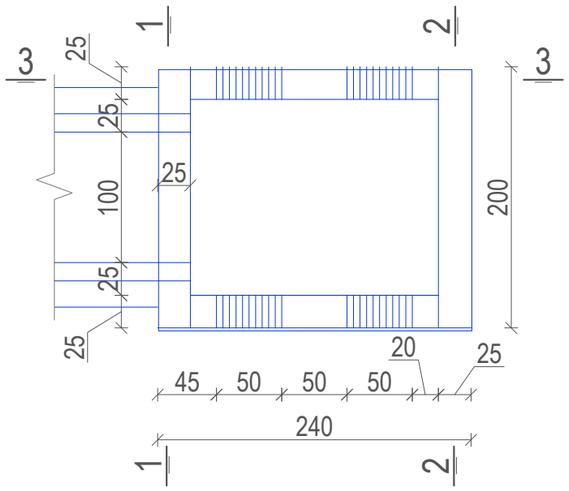

PRERJE TERTHORE A-A

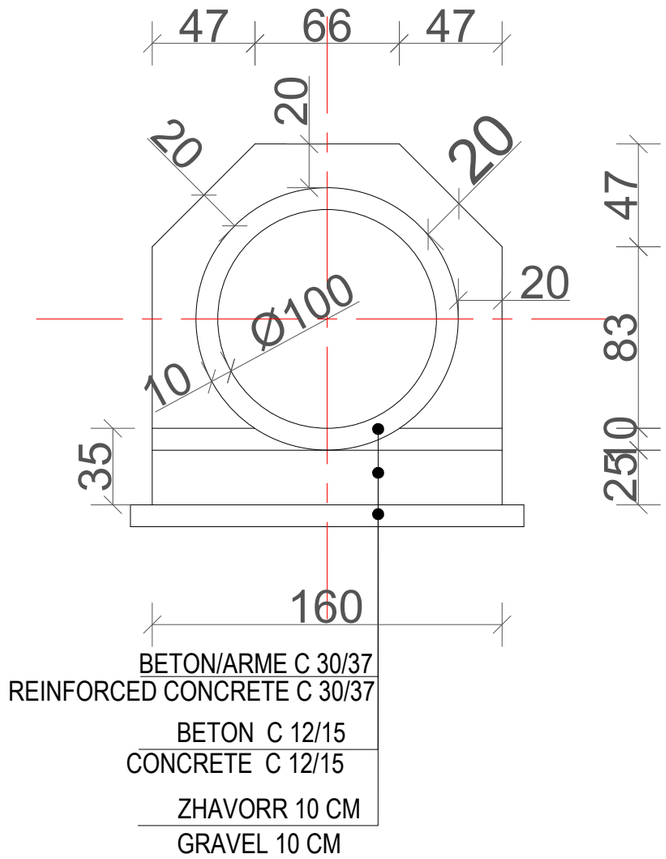

INVESTITORI / INVESTOR
"Autoriteti Rrugor Shqiptar"
Address: Rr. "Sami Frasheri", Nr 33, Tirane
Mob: 04 222 3600
E-mail: info@arrsh.gov.al

JV: "InfraKonsult" shpk & "HMK-Consulting" shpk

"Studim Projektim - Zgjerimi i segmentit rrugor dalje Elbasan-Prrenjas-Qafe Thane", (Faza II) / "Design Study of road segment exit Elbasan-Prrenjas-Qafe Thane" (Phase II)

PRERJA E TIP E TOMBINOS D=1.00 KM +7+920
PRERJA E PUSETES KM +7+920
SECTION OF CULVERT D=1.00 KM +7+920
MANHOLE SECTION KM +7+920

FAZA - PROJEKT ZBATIM
PHASE - DETAIL DESIGN

SHKALLA	*1:200,100,50*	*Data:Mars 2023*
SCALE	*1:200,100,50*	*Date: March 2023*
VIZATIMI Nr:		
PAGE No:	*E (2)*	

PROJEKTUES:
DESIGN ENGINEERS:
Ing./Eng. Sokol METOJA
Ing./Eng. Redi STRUGA
Ing./Eng. Orgest MËRTIKA

ARMIMI I TUBIT D=100cm
SH.1:50

PRERJE TERTHORE
CROSS SECTION

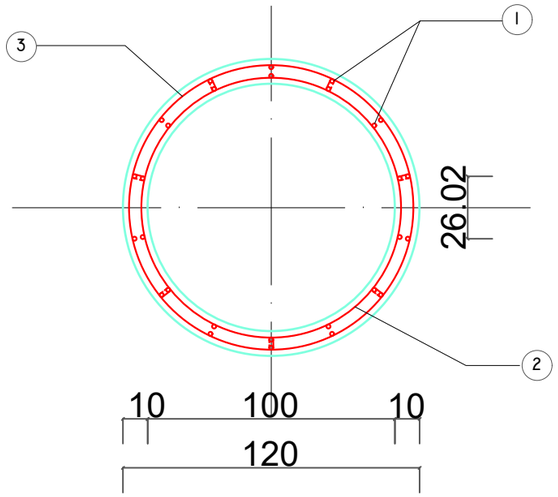

PRERJE GJATESORE
LONGITUDINAL SECTION

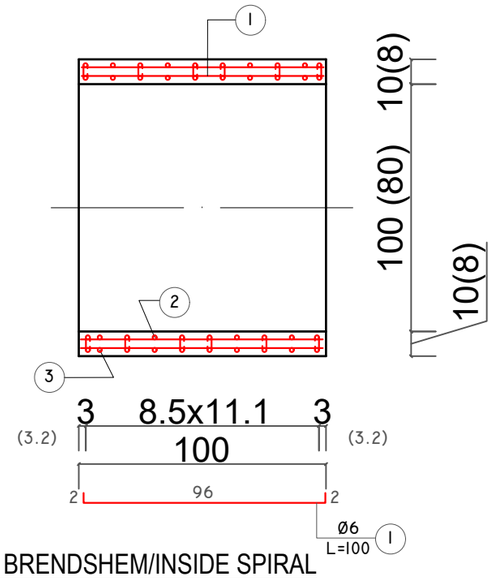

PRERJA /SEKSIONI b-b
Sh/Sc 1:50

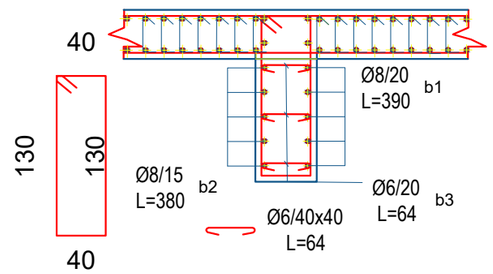

ARMATURA SPIRALE PER D=100
SPIRAL REINFORCEMENT

I JASHTEM/OUTSIDE SPIRAL REBAR
8.5x11.1

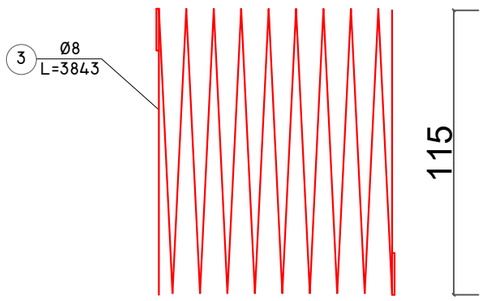

I BRENDSHEM/INSIDE SPIRAL REBAR
8.5x11.1

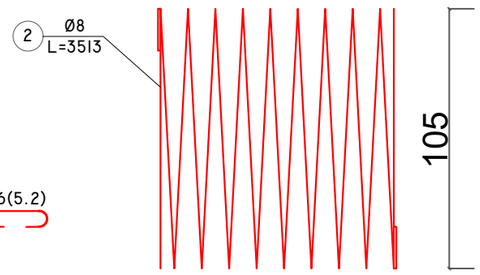

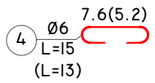

INVESTITORI / INVESTOR
"Autoriteti Rrugor Shqiptar"
Address: Rr. "Sami Frasheri", Nr 33, Tirane
Mob: 04 222 3600
E-mail: info@arrsh.gov.al

JV: "InfraKonsult" shpk & "HMK-Consulting" shpk

"Studim Projektim - Zgjerimi i segmentit rrugor dalje Elbasan-Prrenjas-Qafe Thane", (Faza II) / "Design Study of road segment exit Elbasan-Prrenjas-Qafe Thane" (Phase II)

ARMIMI I TOMBINOS D=1.00m/KM +7+920
REINFORCMENT OF CULVERT D=1.00 /KM +7+920

FAZA - PROJEKT ZBATIM
PHASE - DETAIL DESIGN

SHKALLA / SCALE	1:50 / 1:50	Data:Mars 2023 / Date: March 2023
VIZATIMI / PAGE	Nr: / No: E (3)	

PROJEKTUES / DESIGN ENGINEERS:
Ing./Eng. Sokol METOJA
Ing./Eng. Redi STRUGA
Ing./Eng. Orgest MËRTIKA

PRERJE E PUSETES sh.1:50/
MANHOLE CROSS SECTION sc.1:50/

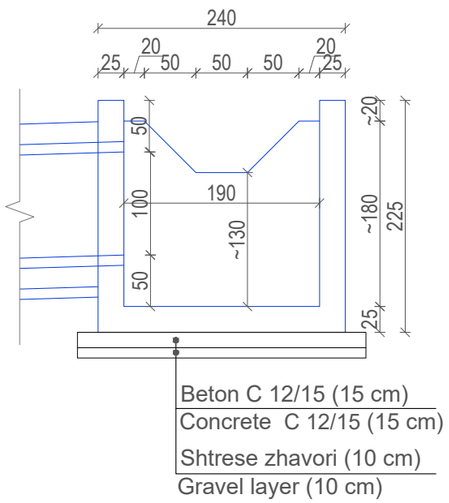

PLANIMETRI E PUSETES sh.1:50
MANHOLE PLANVIEW sc.1:50

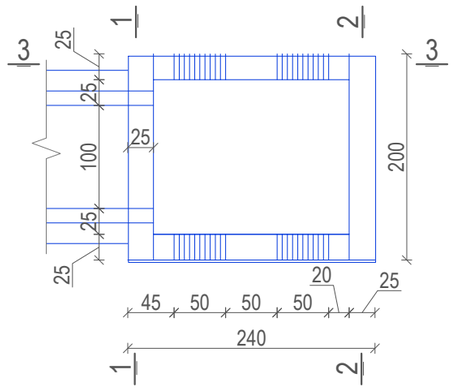

ARMIMI I PUSETE/MANHOLES'S REINFORCMENT (Ton)						
Pos/Poz	Φ (mm)	L (cm)	Cope	Ltotal (m)	Weight /Pesha (Kg/m)	Weight /Pesha (kg)
1	12	265	30	79.50	0.897	71.29
2	12	225	22	49.50	0.897	44.39
3	8	225	28	63.00	0.399	25.11
4	8	265	24	63.60	0.399	25.35
5	12	250	30	75.00	0.897	67.25
6	8	100	28	28.00	0.399	11.16
7	8	273	4	10.92	0.399	4.35
8	12	180	12	21.60	0.897	19.37
9	12	214	24	51.36	0.897	46.05
10	12	119	14	16.66	0.897	14.94
11	8	105	14	14.70	0.399	5.86
ARMIMI I PUSETE/MANHOLES'S REINFORCMENT (Ton)						**0.34**
BETONI (PUSETE) / CONCRETE (MANHOLE) (m3)						**4.95**
BETONI C12/15 / CONCRETE 12/15 (m3)						**0.67**
GRAVEL / ZHAVORR (m3)						**0.67**

Shënime Teknike :
- Shtresa mbrojtëse është 4cm.
- Gjatësia minimale e mbivendosjes së shufrave është 50Ø.
- Klasa e betonit është C25/30.
- Klasa e çelikut është B450, fyk = 500 MPa.
- Klasa e betonit të varfër është C12/15.

Technical Notes :
- Protective layer is 4cm.
- Minimal length of rebars overlapping is 50Ø.
- Concrete class is C25/30.
- Steel class is B450, fyk = 500 MPa.
- Class of concrete layer under culvert is C12/15.

ARMIMI I PUSETES sh.1:50
MANHOLE REINFORCEMENT sc. 1:50

PRERJA 1-1 sh.1:50
SECTION 1-1 sc.1:50

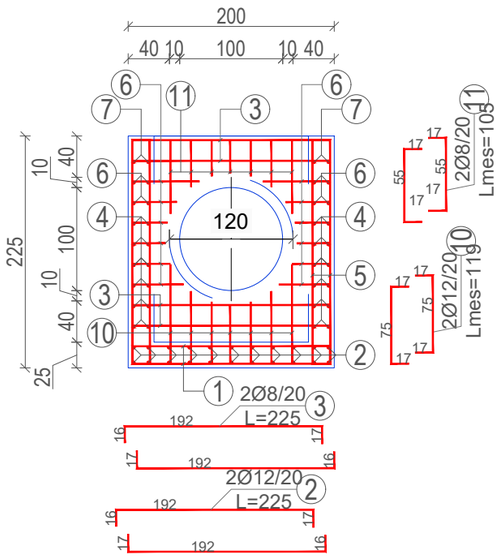

PRERJA 2-2 sh.1:50
SECTION 2-2 sh.1:50

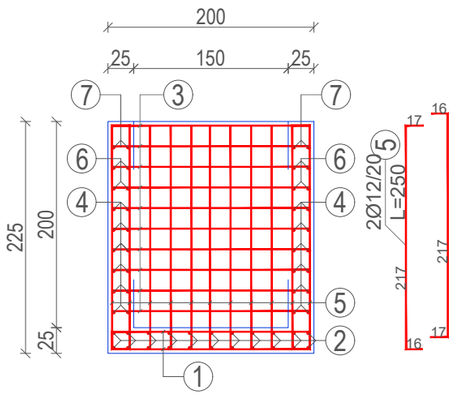

PRERJA 3-3 sh.1:50
SECTION 3-3 sc.1:50

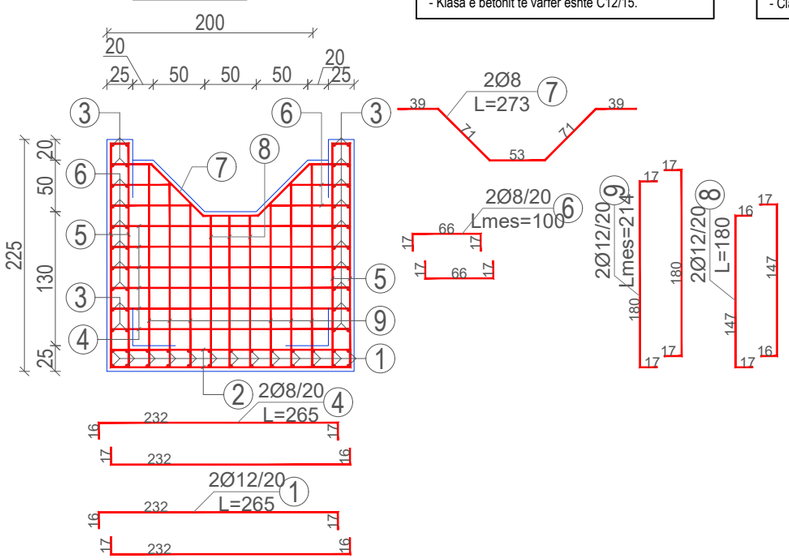

INVESTITORI / INVESTOR
"Autoriteti Rrugor Shqiptar"
Address: Rr. "Sami Frasheri", Nr 33, Tirane
Mob: 04 222 3600
E-mail: info@arrsh.gov.al

JV: "InfraKonsult" shpk & "HMK-Consulting" shpk

"Studim Projektim - Zgjerimi i segmentit rrugor dalje Elbasan-Prrenjas-Qafe Thane", (Faza II) / "Design Study of road segment exit Elbasan-Prrenjas-Qafe Thane" (Phase II)

ARMIMI I PUSETES D=1.00m/KM +7+920
MANHOLE REINFORCMENT D=1.00 /KM +7+920

FAZA - PROJEKT ZBATIM
PHASE - DETAIL DESIGN

SHKALLA / *SCALE*	*1:50* / *1:50*	*Data:Mars 2023* / *Date: March 2023*
VIZATIMI Nr: / *PAGE No:*	*E (4)*	

PROJEKTUES:
DESIGN ENGINEERS:
Ing./Eng. Sokol METOJA
Ing./Eng. Redi STRUGA
Ing./Eng. Orgest MËRTIKA

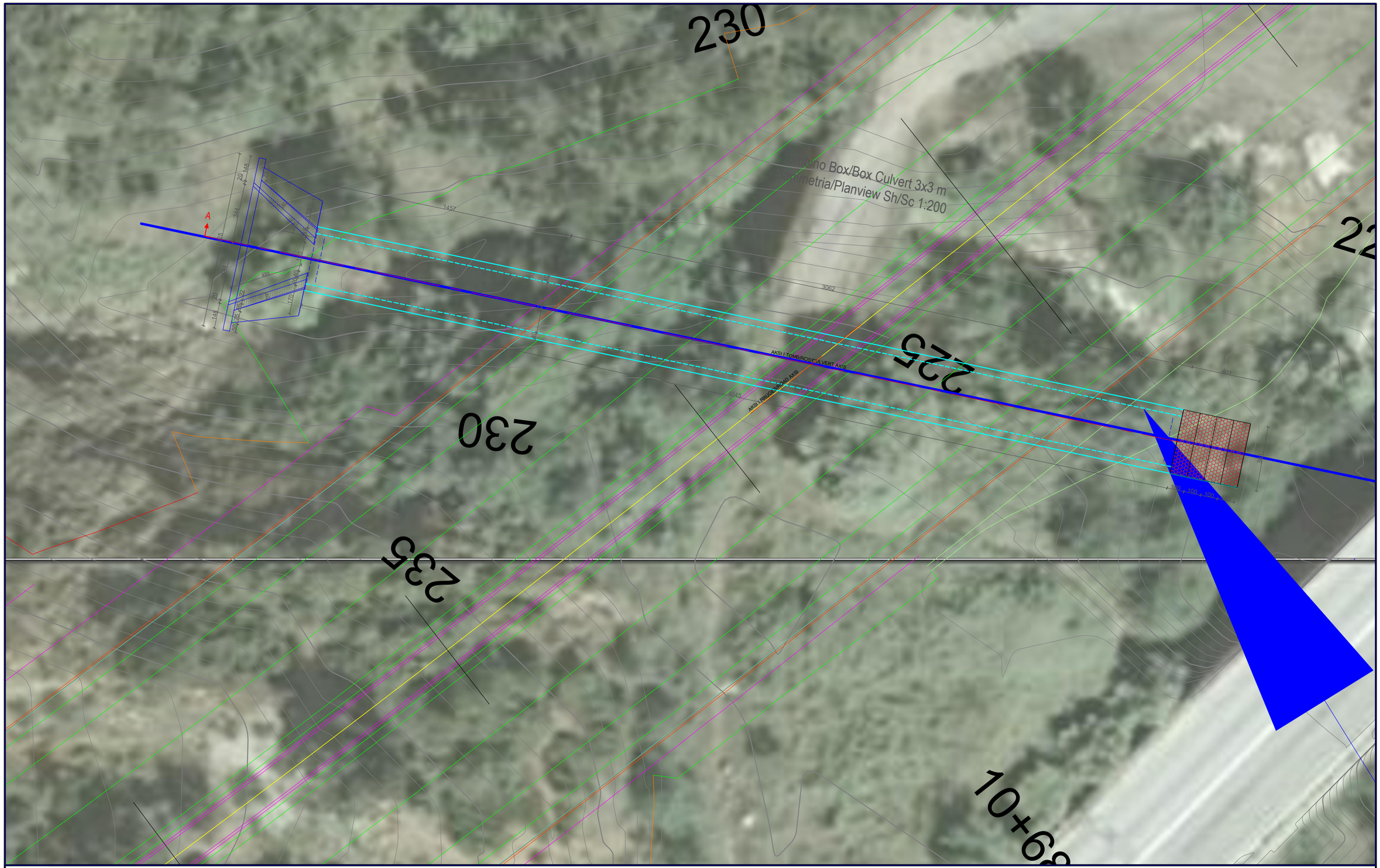

INVESTITORI / INVESTOR

"Autoriteti Rrugor Shqiptar"

Address: Rr. "Sami Frasheri", Nr 33, Tirane

Mob: 04 222 3600
E-mail: info@arrsh.gov.al

JV: "InfraKonsult" shpk & "HMK-Consulting" shpk

"Studim Projektim - Zgjerimi i segmentit rrugor dalje Elbasan-Prrenjas-Qafe Thane", (Faza II) / "Design Study of road segment exit Elbasan-Prrenjas-Qafe Thane" (Phase II)

Planimetria e Tombinos-Km 10+687.06
Planview Culvert - Km 10+687.06

FAZA - PROJEKT ZBATIM
PHASE - DETAIL DESIGN

SHKALLA / SCALE	1:200 / 1:200	Data: Mars 2023 / Date: March 2023
VIZATIMI Nr: / PAGE No:	E (0)	

PROJEKTUES:
DESIGN ENGINEERS:

Ing./Eng. Sokol METOJA
Ing./Eng. Redi STRUGA
Ing./Eng. Orgest MËRTIKA

Tombino Box/Box Culvert 3x3 m
Planimetria/Planview Sh/Sc 1:200

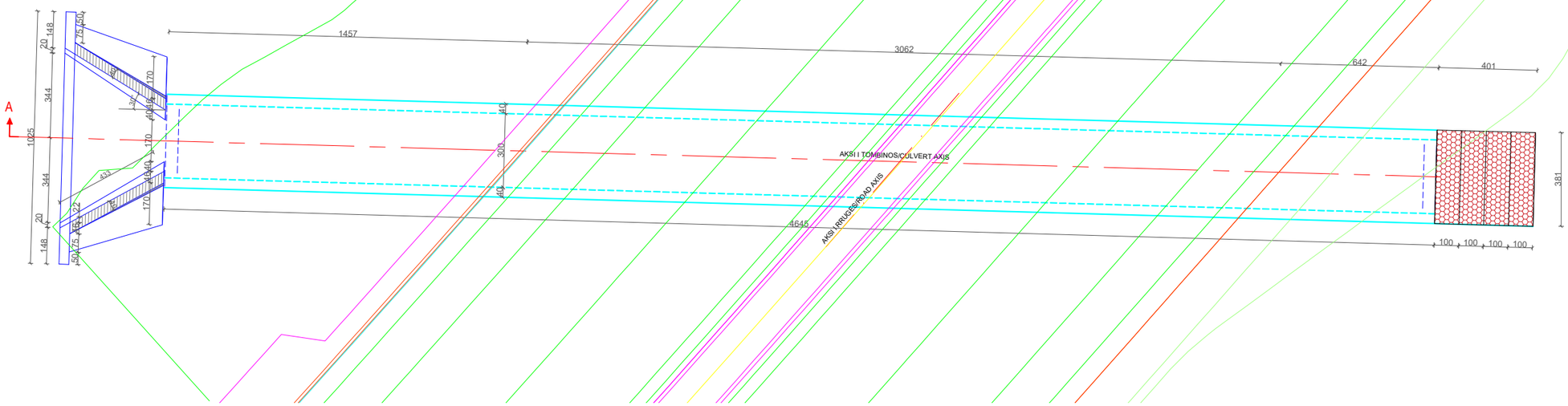

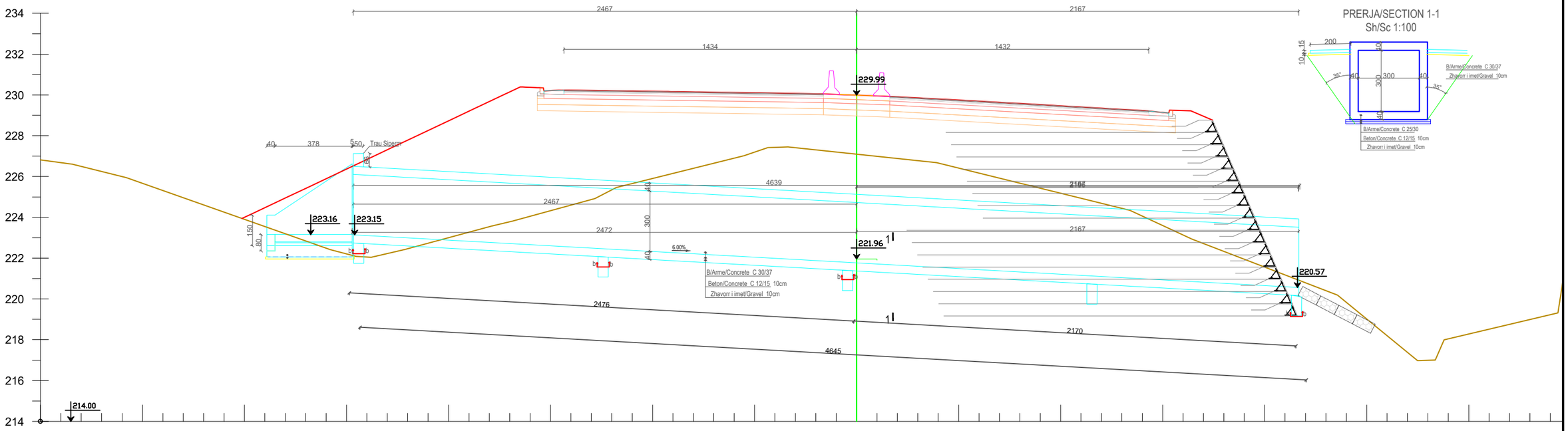

Km. 10+687.06

INVESTITORI / INVESTOR **"Autoriteti Rrugor Shqiptar"** **Address:** Rr. "Sami Frasheri", Nr 33, Tirane **Mob:** 04 222 3600 **E-mail:** info@arrsh.gov.al	***JV: "InfraKonsult" shpk & "HMK-Consulting" shpk***	***"Studim Projektim - Zgjerimi i segmentit rrugor dalje Elbasan-Prrenjas-Qafe Thane", (Faza II) / "Design Study of road segment exit Elbasan-Prrenjas-Qafe Thane" (Phase II)*** ***Tombino Kuti 3.0X3.0 m / Box Culvert 3.0X3.0- Km 10+687.06***	FAZA - PROJEKT ZBATIM PHASE - DETAIL DESIGN *SHKALLA 1:200,100 / SCALE 1:200,100* — *Data: Mars 2023 / Date: March 2023* *VIZATIMI Nr: / PAGE No:* *E (1)*

PROJEKTUES / DESIGN ENGINEERS:
Ing./Eng. Sokol METOJA
Ing./Eng. Redi STRUGA
Ing./Eng. Orgest MËRTIKA

ARMIMI I TOMBINOS KUTI 3.0 m x 3.0 m (PER 1ml) Sh 1:50

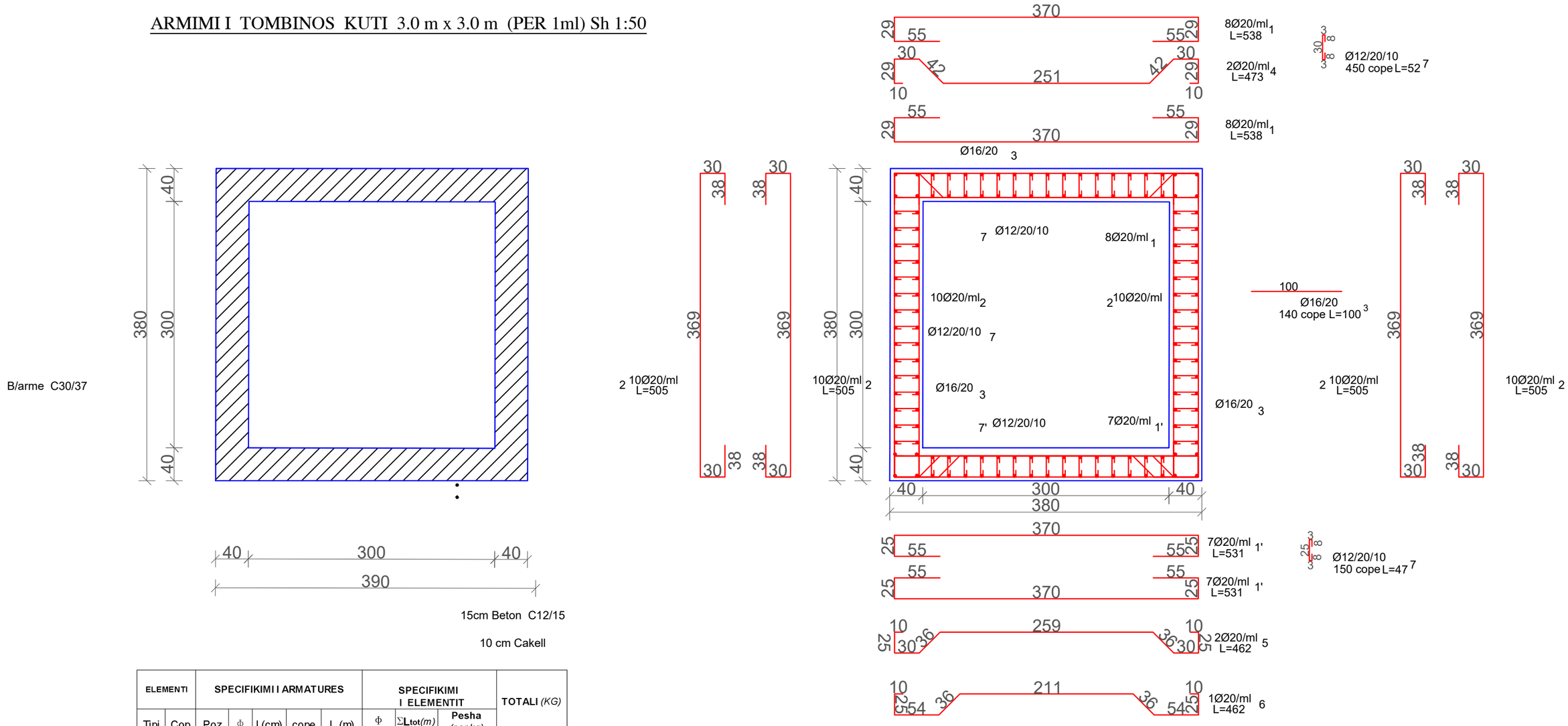

ELEMENTI		SPECIFIKIMI I ARMATURES					SPECIFIKIMI I ELEMENTIT			TOTALI (KG)
Tipi	Cop	Poz	Φ	l (cm)	cope	L (m)	Φ	ΣLtot(m)	Pesha (per kg)	
Tombino 3 x 3	1	1	20	538	16	86.08	6		0.222	
		1'	20	531	14	74.34	8		0.395	
		2	20	505	40	202	10		0.617	
		3	16	100	136	136	12	441	0.888	392
		4	20	473	2	9.46	14		1.208	
		5	20	462	2	9.24	16	222	1.578	350
		6	20	462	1	4.62	18		1.998	
		7	12	52	450	234	20	386	2.466	951
		7'	12	45	150	67.5	22		2.984	
		b1	16	390	22	85.8	24		3.551	
		b2	12	633	22	139.26				
		b3	12	0.64	45	0.288				
										1693
		HEKUR PER 1ML /REINFORCEMENT FOR 1ML							KG	1434
		HEKUR PER 44.34 ML / REINFORCEMENT FOR 44.34 ML							KG	63,843
		BETON C30/37 /CONCRETE C30/37							M³	282.5

MATERIALET

TOMBINO KUTI : B/ARME C30/37

SHTRESE E VARFER : BETON C12/15

HEKURI: B500C, fyk=500MPa

SHTRESA MBROJTESE 5-10cm

INVESTITORI / INVESTOR
"Autoriteti Rrugor Shqiptar"
Address: Rr. "Sami Frasheri", Nr 33, Tirane
Mob: 04 222 3600
E-mail: info@arrsh.gov.al

InfraKonsult konsulence inxhinierike
HMK-CONSULTING SH.P.K Konsulence-Projektim-Mbikqyrje
JV: "InfraKonsult" shpk & "HMK-Consulting" shpk

"Studim Projektim - Zgjerimi i segmentit rrugor dalje Elbasan-Prrenjas-Qafe Thane", (Faza II) / "Design Study of road segment exit Elbasan-Prrenjas-Qafe Thane" (Phase II)

Armimi i Tombinos Kuti 3.0x3.0 m / Reinforcement of Box Culvert 3.0x3.0 m - Km 10+687.06

FAZA - PROJEKT ZBATIM
PHASE - DETAIL DESIGN

SHKALLA 1:50
SCALE 1:50
Data: Mars 2023
Date: March 2023
VIZATIMI Nr:
PAGE No: E (2)

PROJEKTUES:
DESIGN ENGINEERS:
Ing./Eng. Sokol METOJA
Ing./Eng. Redi STRUGA
Ing./Eng. Orgest MËRTIKA

SPERONE PER TOMBINON 3X3M
SH. 1:50

PRERJE GJATESORE NE AKS TE TOMBINOS
SHTRESAT MBI TOMBINO H=65cm

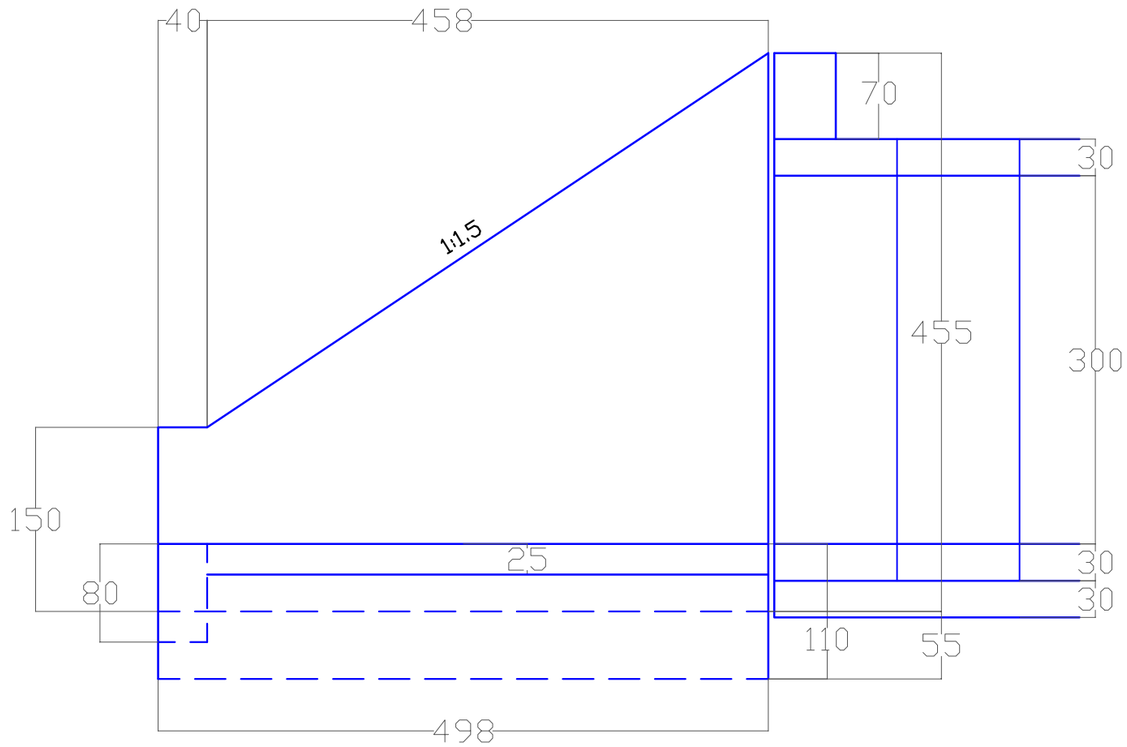

PAMJE NGA LART

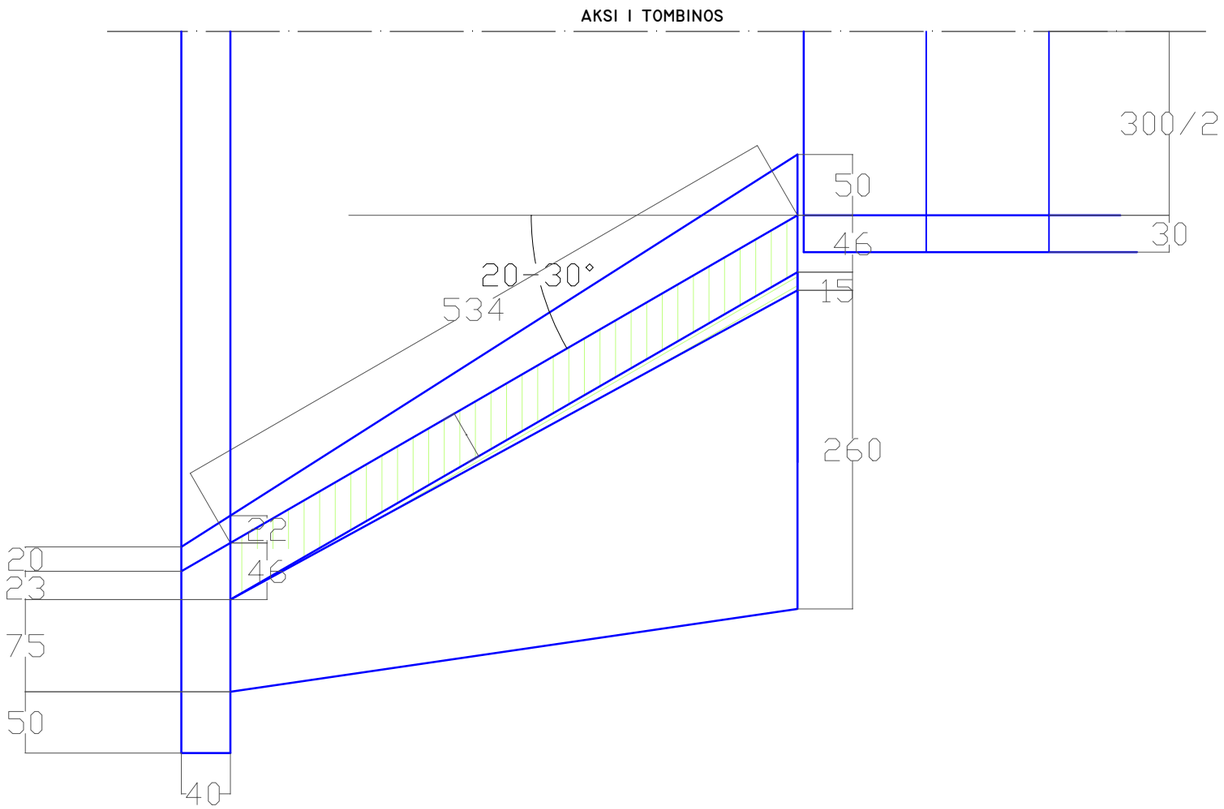

INVESTITORI / INVESTOR **"Autoriteti Rrugor Shqiptar"** **Address:** Rr. "Sami Frasheri", Nr 33, Tirane **Mob:** 04 222 3600 **E-mail:** info@arrsh.gov.al	**JV: "InfraKonsult" shpk & "HMK-Consulting" shpk**	***"Studim Projektim - Zgjerimi i segmentit rrugor dalje Elbasan-Prrenjas-Qafe Thane", (Faza II) / "Design Study of road segment exit Elbasan-Prrenjas-Qafe Thane" (Phase II)*** ***Armimi i Tombinos Kuti 3.0x3.0 m / Reinforcement of Box Culvert 3.0x3.0 m - Km 10+687.06***	FAZA - PROJEKT ZBATIM PHASE - DETAIL DESIGN SHKALLA / SCALE 1:50 / 1:50 Data: Mars 2023 / Date: March 2023 VIZATIMI Nr: / PAGE No: E (3)

PROJEKTUES:
DESIGN ENGINEERS:
Ing./Eng. Sokol METOJA
Ing./Eng. Redi STRUGA
Ing./Eng. Orgest MËRTIKA

ARMIMI I SPERONAVE PER TOMBINON 3X3m

SH. 1:50

PRERJE A-A

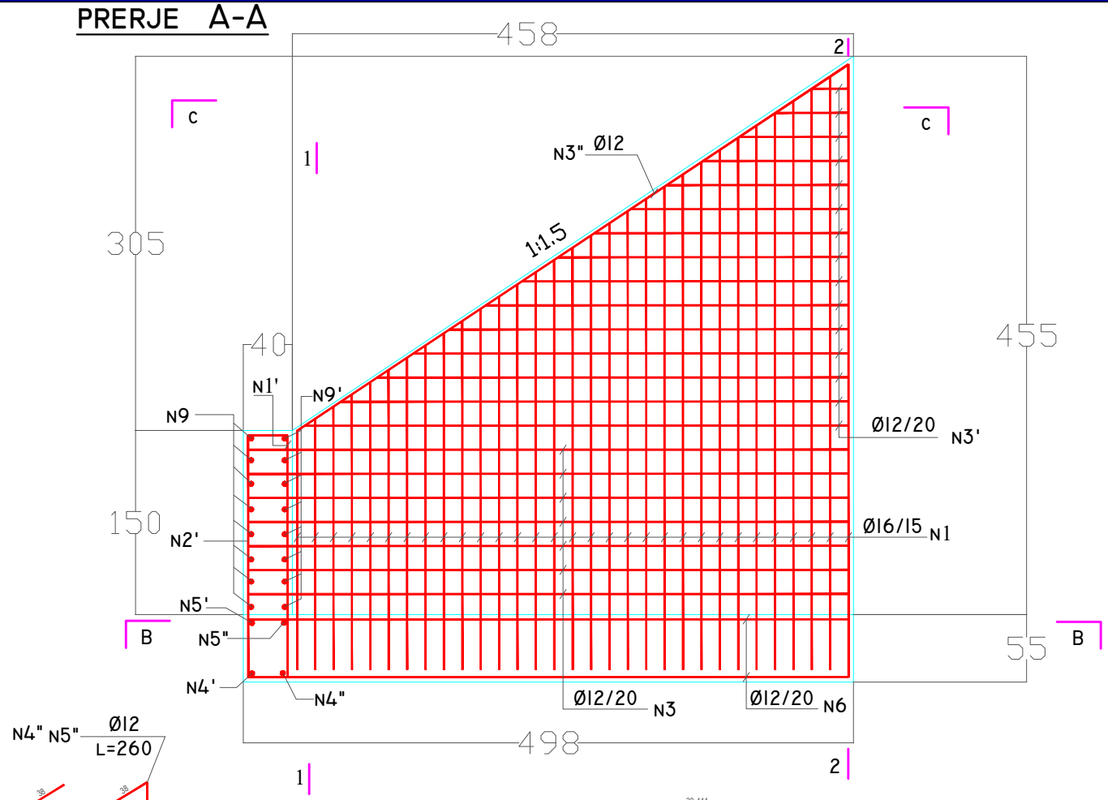

PRERJE B-B

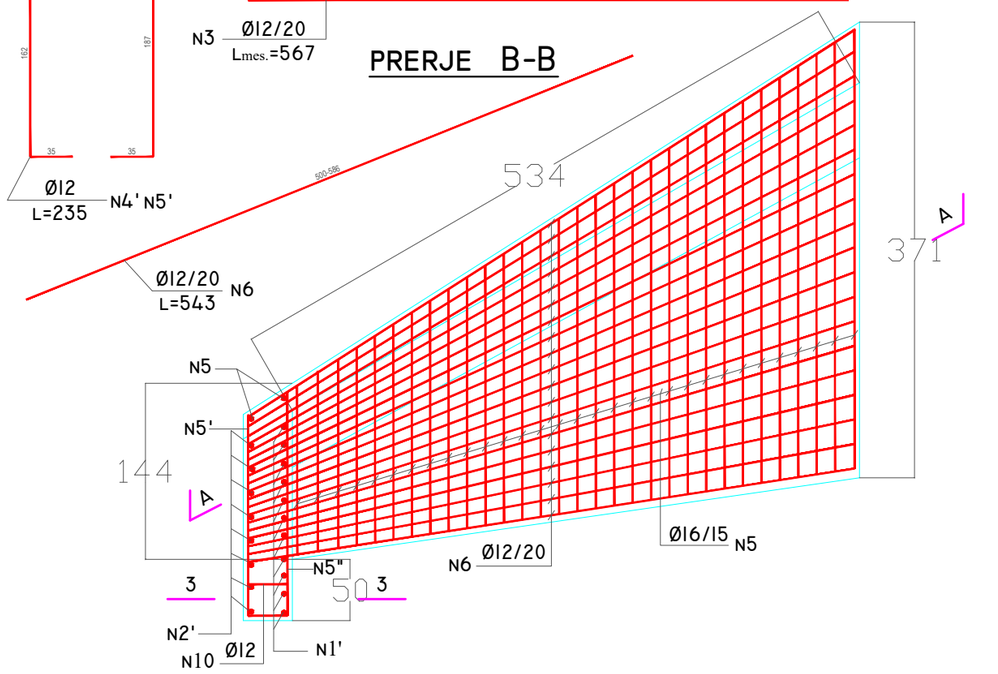

PRERJE 3-3

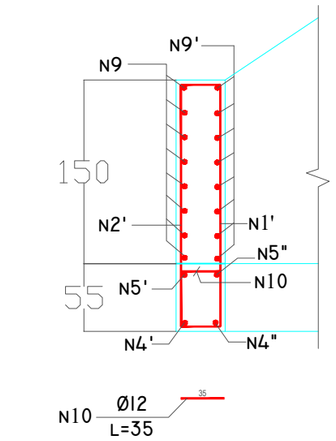

PRERJE 1-1

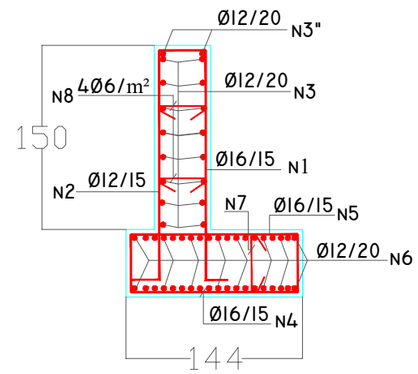

N7 4Ø6/m² L=69

INVESTITORI / INVESTOR "Autoriteti Rrugor Shqiptar" Address: Rr. "Sami Frasheri", Nr 33, Tirane; Mob: 04 222 3600; E-mail: info@arrsh.gov.al	JV: "InfraKonsult" shpk & "HMK-Consulting" shpk	"Studim Projektim - Zgjerimi i segmentit rrugor dalje Elbasan-Prrenjas-Qafe Thane", (Faza II) / "Design Study of road segment exit Elbasan-Prrenjas-Qafe Thane" (Phase II) Armimi i Tombinos Kuti 3.0x3.0 m / Reinforcement of Box Culvert 3.0x3.0 m - Km 10+687.06	FAZA - PROJEKT ZBATIM PHASE - DETAIL DESIGN SHKALLA / SCALE 1:50 1:50 Data: Mars 2023 / Date: March 2023 VIZATIMI / PAGE Nr: / No: E (4)

PROJEKTUES / DESIGN ENGINEERS:
Ing./Eng. Sokol METOJA
Ing./Eng. Redi STRUGA
Ing./Eng. Orgest MËRTIKA

ARMIMI I SPERONAVE PER TOMBINON 3X3m

SH. 1:50

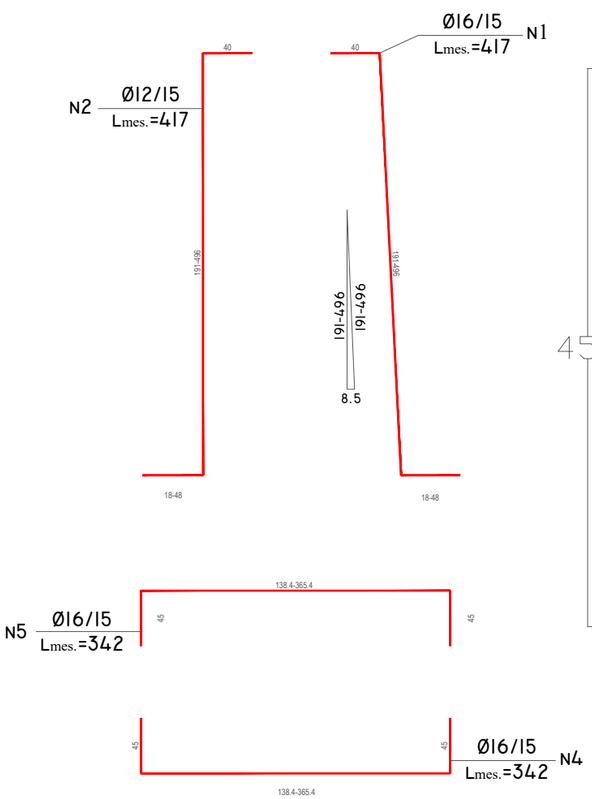

PRERJE 2-2

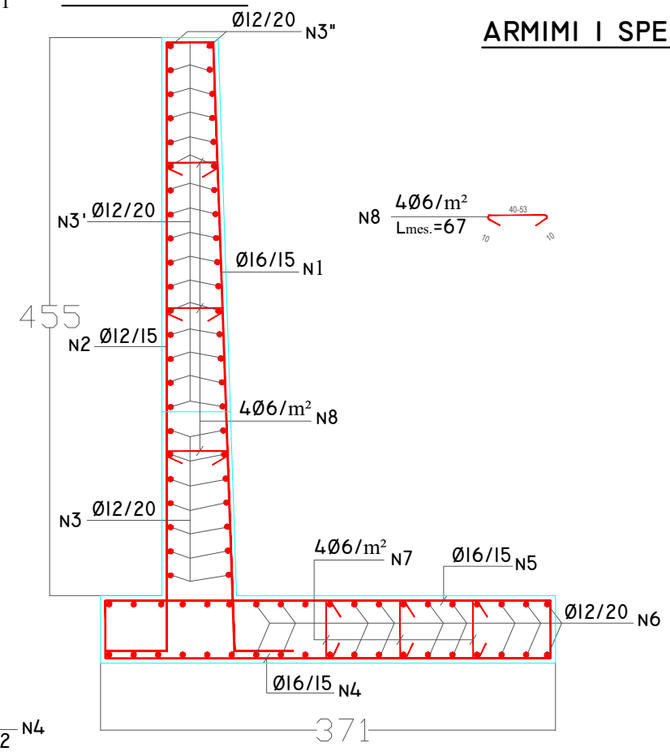

N8 4Ø6/m²
Lmes.=67

PRERJE C-C

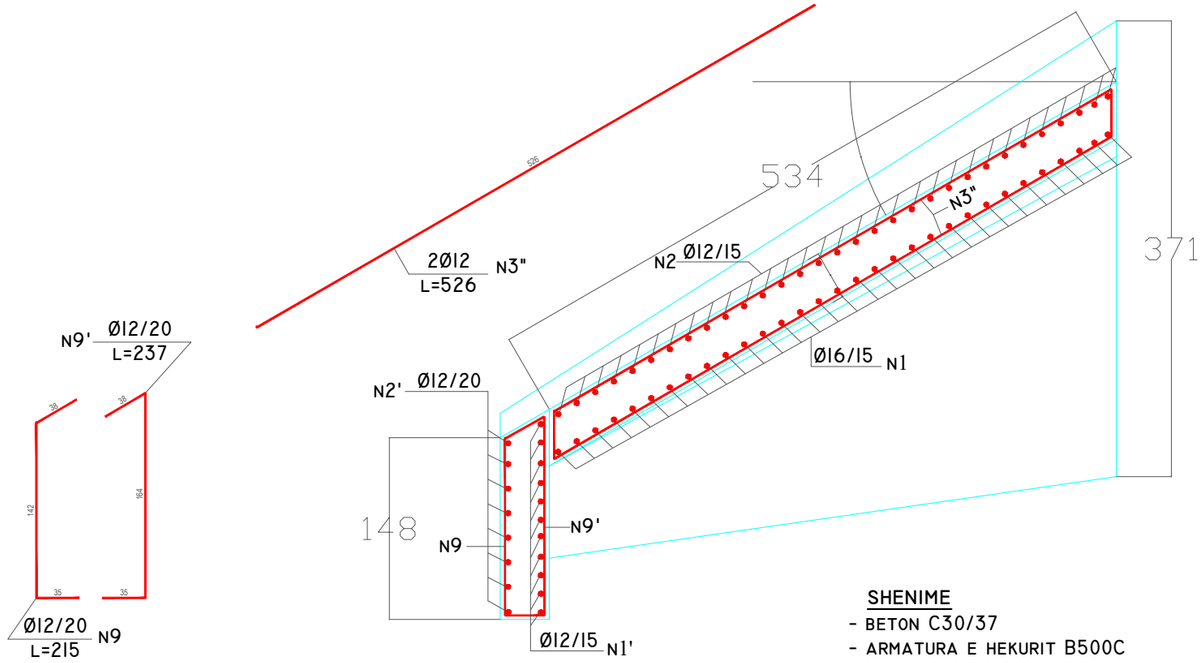

SHENIME

- BETON C30/37
- ARMATURA E HEKURIT B500C

TABELA E HEKURIT PER NJE SPERON

NR. POZ.	Ø mm	L cm	SASIA cope	L m	PERMBLEDHJE E ARMATURES Ø mm	ΣL m	PESHA kg/ml	PESHA kg
1	16	417	31	129.27	6	69.95	0.222	15.53
1'	12	270	11	29.70	12	594.32	0.888	527.76
2	12	417	31	129.27	16	341.31	1.578	538.59
2'	12	270	8	21.60				
3	12	567	14	79.38				
3'	12	237	30	71.10				
3"	12	526	2	10.52				
4	16	342	31	106.02				
4'	12	235	1	2.35				
4"	12	260	1	2.60				
5	16	342	31	106.02				
5'	12	235	1	2.35				
5"	12	260	1	2.60				
6	12	543	38	206.34				
7	6	69	47	32.43				
8	6	67	56	37.52				
9	12	215	8	17.20				
9'	12	237	8	18.96				
10	12	35	1	0.35				
HEKURI PERIODIK							kg	1081.88
BETON C30/37							m³	13.94
BETON C12/15							m³	1.85
GRAVEL							m³	1.85

INVESTITORI / INVESTOR
"Autoriteti Rrugor Shqiptar"
Address: Rr. "Sami Frasheri", Nr 33, Tirane
Mob: 04 222 3600
E-mail: info@arrsh.gov.al

JV: "InfraKonsult" shpk & "HMK-Consulting" shpk

"Studim Projektim - Zgjerimi i segmentit rrugor dalje Elbasan-Prrenjas-Qafe Thane", (Faza II) / "Design Study of road segment exit Elbasan-Prrenjas-Qafe Thane" (Phase II)

Armimi i Tombinos Kuti 3.0x3.0 m / Reinforcement of Box Culvert 3.0x3.0 m - Km 10+687.06

FAZA - PROJEKT ZBATIM
PHASE - DETAIL DESIGN

SHKALLA 1:50
SCALE 1:50

Data: Mars 2023
Date: March 2023

VIZATIMI Nr:
PAGE No: E (5)

PROJEKTUES:
DESIGN ENGINEERS:
Ing./Eng. Sokol METOJA
Ing./Eng. Redi STRUGA
Ing./Eng. Orgest MËRTIKA

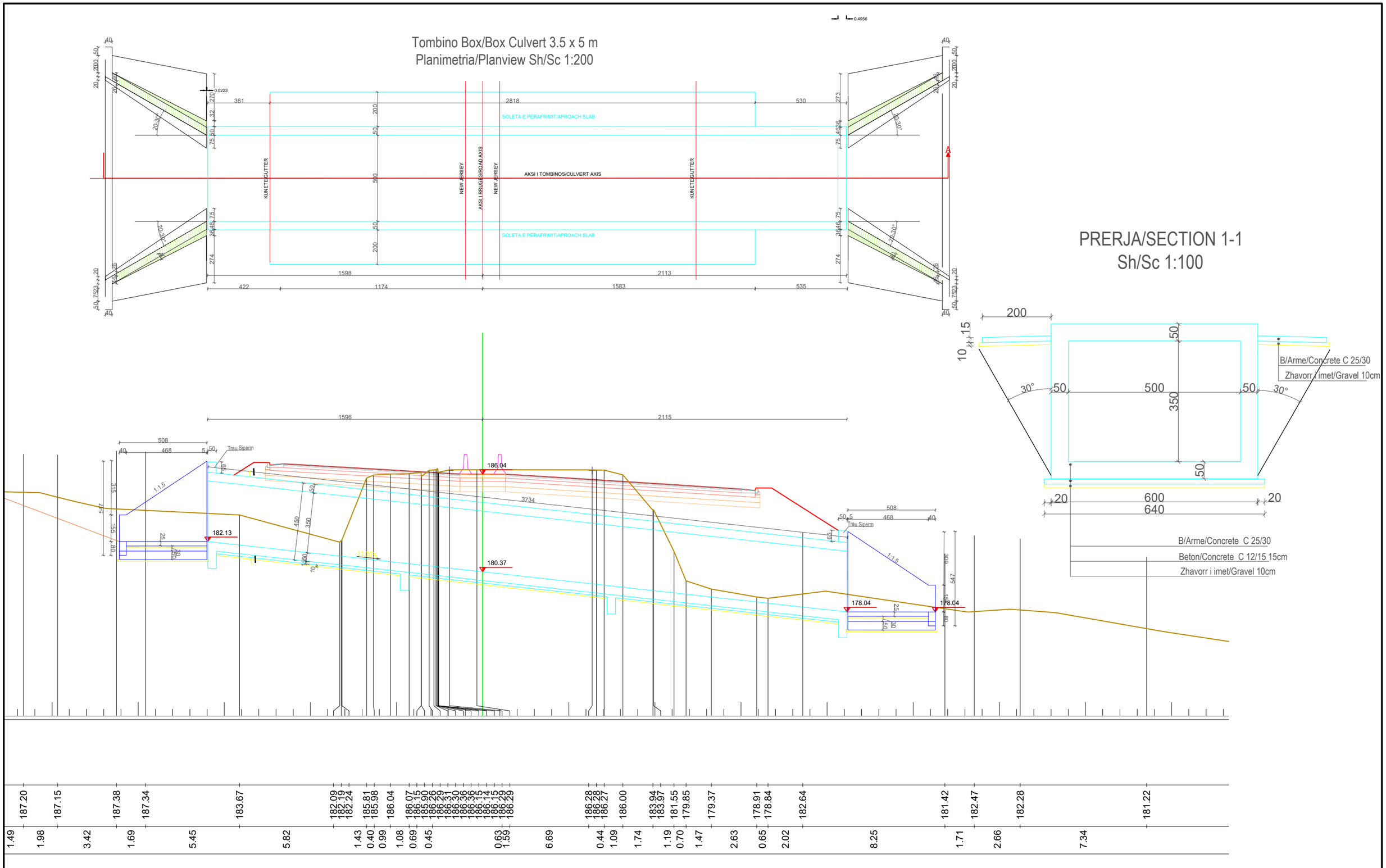

INVESTITORI / INVESTOR

"Autoriteti Rrugor Shqiptar"

Address: Rr. "Sami Frasheri", Nr 33, Tirane

Mob: 04 222 3600
E-mail: info@arrsh.gov.al

JV: "InfraKonsult" shpk & "HMK-Consulting" shpk

"Studim Projektim - Zgjerimi i segmentit rrugor dalje Elbasan-Prrenjas-Qafe Thane", (Faza II) / "Design Study of road segment exit Elbasan-Prrenjas-Qafe Thane" (Phase II)

Tombino Kuti 3.5 x 5 m / Box Culvert 3.5 x 5 m - Km 6+738.80

FAZA - PROJEKT ZBATIM
PHASE - DETAIL DESIGN

SHKALLA / SCALE	1:200 / 1:200	Data: Mars 2023 / Date: March 2023
VIZATIMI Nr: / PAGE No:	E (1)	

PROJEKTUES:
DESIGN ENGINEERS:

Ing./Eng. Sokol METOJA
Ing./Eng. Redi STRUGA
Ing./Eng. Orgest MËRTIKA

SEKSIONI TIP

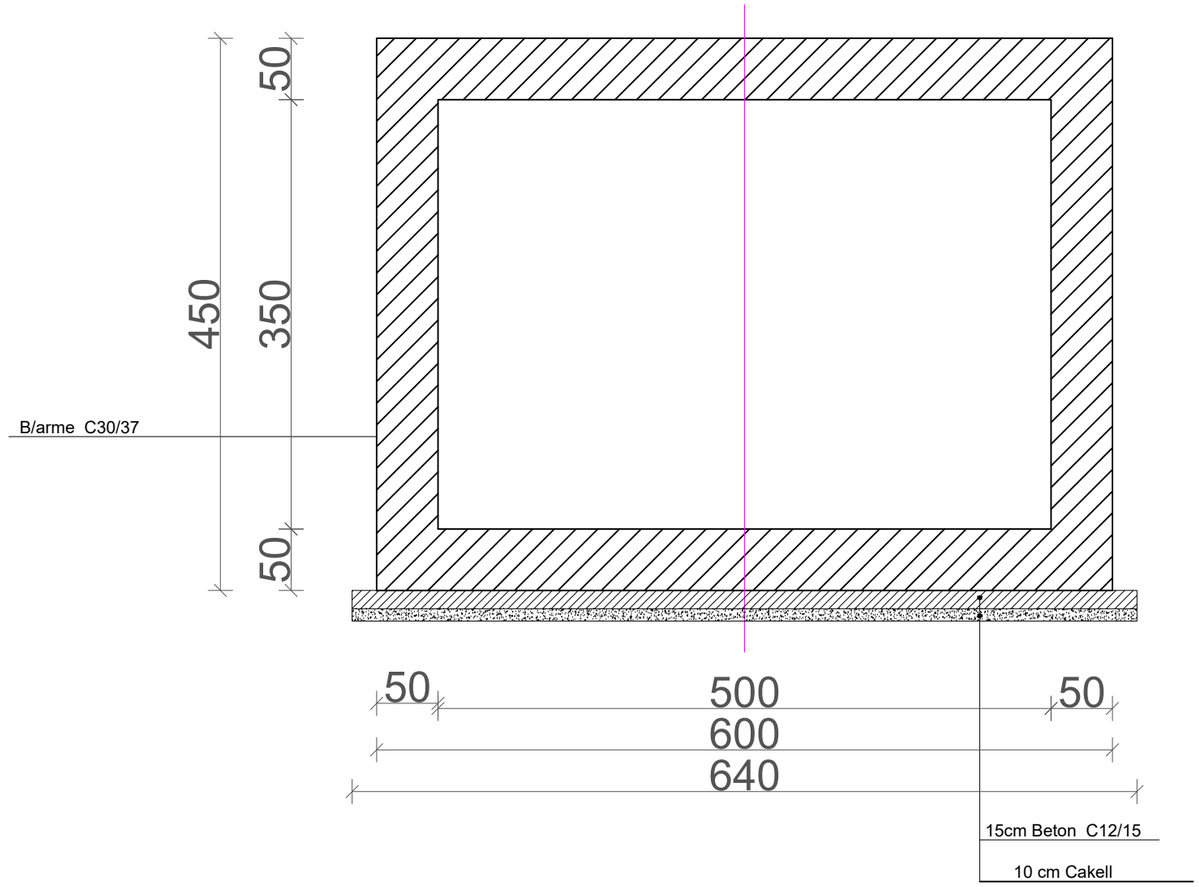

INVESTITORI / INVESTOR

"Autoriteti Rrugor Shqiptar"

Address: Rr. "Sami Frasheri", Nr 33, Tirane

Mob: 04 222 3600
E-mail: info@arrsh.gov.al

JV: "InfraKonsult" shpk & "HMK-Consulting" shpk

"Studim Projektim - Zgjerimi i segmentit rrugor dalje Elbasan-Prrenjas-Qafe Thane", (Faza II) / "Design Study of road segment exit Elbasan-Prrenjas-Qafe Thane" (Phase II)

Seksioni Tip i Tombinos Kuti / Typical Section of Box Culvert Km 6+738.80

FAZA - PROJEKT ZBATIM
PHASE - DETAIL DESIGN

SHKALLA / SCALE	1:50 / 1:50	Data: Mars 2023 / Date: March 2023
VIZATIMI Nr: / PAGE No:	E (2)	

PROJEKTUES:
DESIGN ENGINEERS:
Ing./Eng. Sokol METOJA
Ing./Eng. Redi STRUGA
Ing./Eng. Orgest MËRTIKA

ARMIMI I TOMBINOS KUTI 3.5 m x 3.5 m (PER 1ml) Sh 1:50

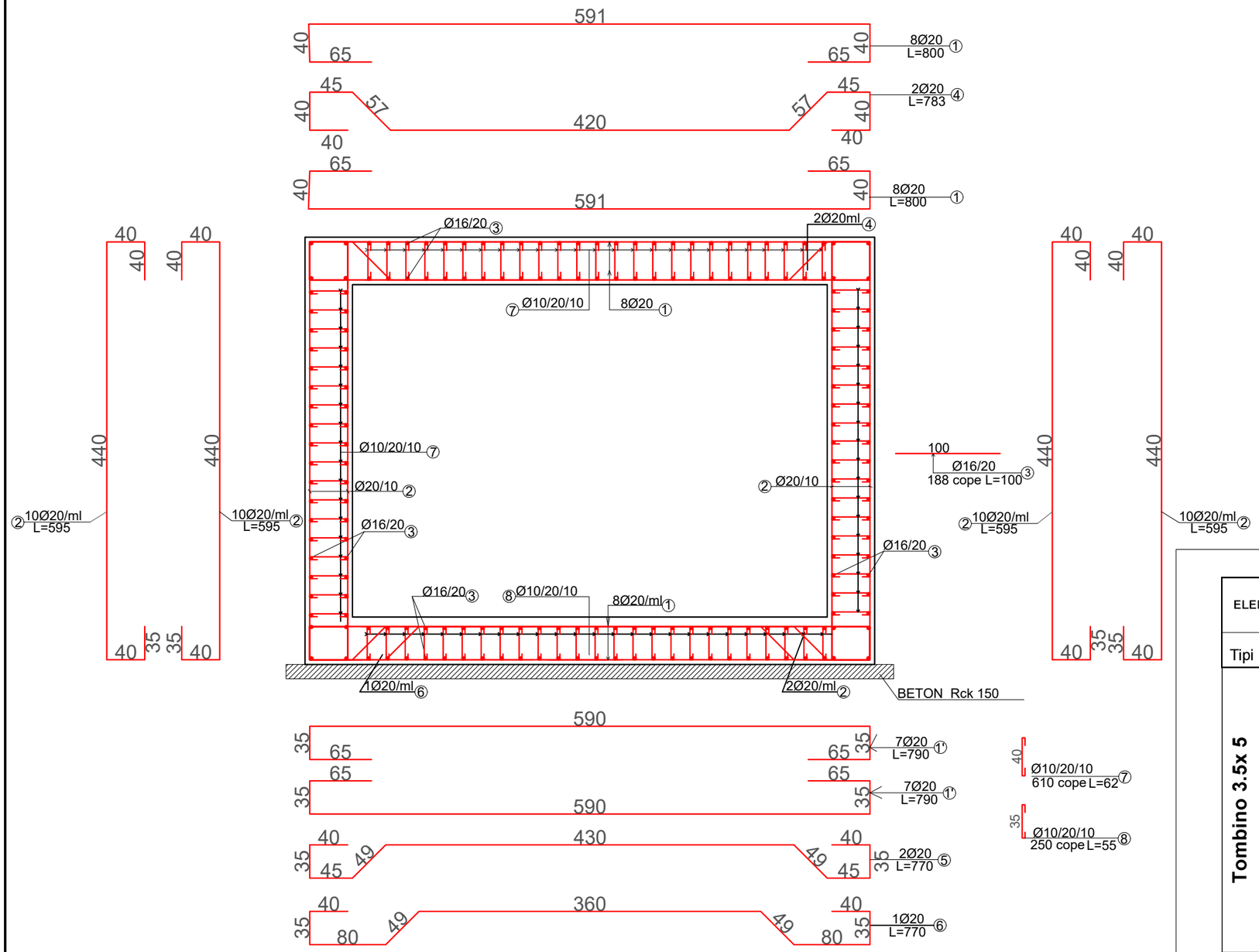

ELEMENTI		SPECIFIKIMI I ARMATURES					SPECIFIKIMI I ELEMENTIT			TOTALI *(KG)*
Tipi	Cop	Poz	Φ	l (cm)	cope	L (m)	Φ	ΣLtot*(m)*	Pesha *(per kg)*	
Tombino 3.5x 5	1	1	20	800	16	128	***6***		*0.222*	
		1'	20	790	14	110.6	***8***		*0.395*	
		2	20	595	40	238	***10***	516	*0.617*	318
		3	16	100	188	188	***12***		*0.888*	
		4	20	783	2	15.66	***14***		*1.208*	
		5	20	770	2	15.4	***16***	188	*1.578*	297
		6	20	770	1	7.7	***18***		*1.998*	
		7	10	62	610	378.2	***20***	515	*2.466*	1271
		8	10	55	250	137.5	***22***		*2.984*	
							24		*3.551*	
							25		*3.853*	
										1886
		BETON C30/37							m3	354.73
		BETON C12/15							m3	35.8464

INVESTITORI / INVESTOR
"Autoriteti Rrugor Shqiptar"
Address: Rr. "Sami Frasheri", Nr 33, Tirane
Mob: 04 222 3600
E-mail: info@arrsh.gov.al

JV: "InfraKonsult" shpk & "HMK-Consulting" shpk

"Studim Projektim - Zgjerimi i segmentit rrugor dalje Elbasan-Prrenjas-Qafe Thane", (Faza II) / "Design Study of road segment exit Elbasan-Prrenjas-Qafe Thane" (Phase II)

Armimi i Tombinos Kuti 3.5 x 5 m / Box Culvert 3.5 x 5 m Reinforcement - Km 6+738.80

FAZA - PROJEKT ZBATIM
PHASE - DETAIL DESIGN

SHKALLA 1:50
SCALE 1:50

Data: Mars 2023
Date: March 2023

VIZATIMI Nr:
PAGE No: *E (3)*

PROJEKTUES:
DESIGN ENGINEERS:
Ing./Eng. Sokol METOJA
Ing./Eng. Redi STRUGA
Ing./Eng. Orgest MËRTIKA

PRERJA/SECTION b-b
Sh/Sc 1:25

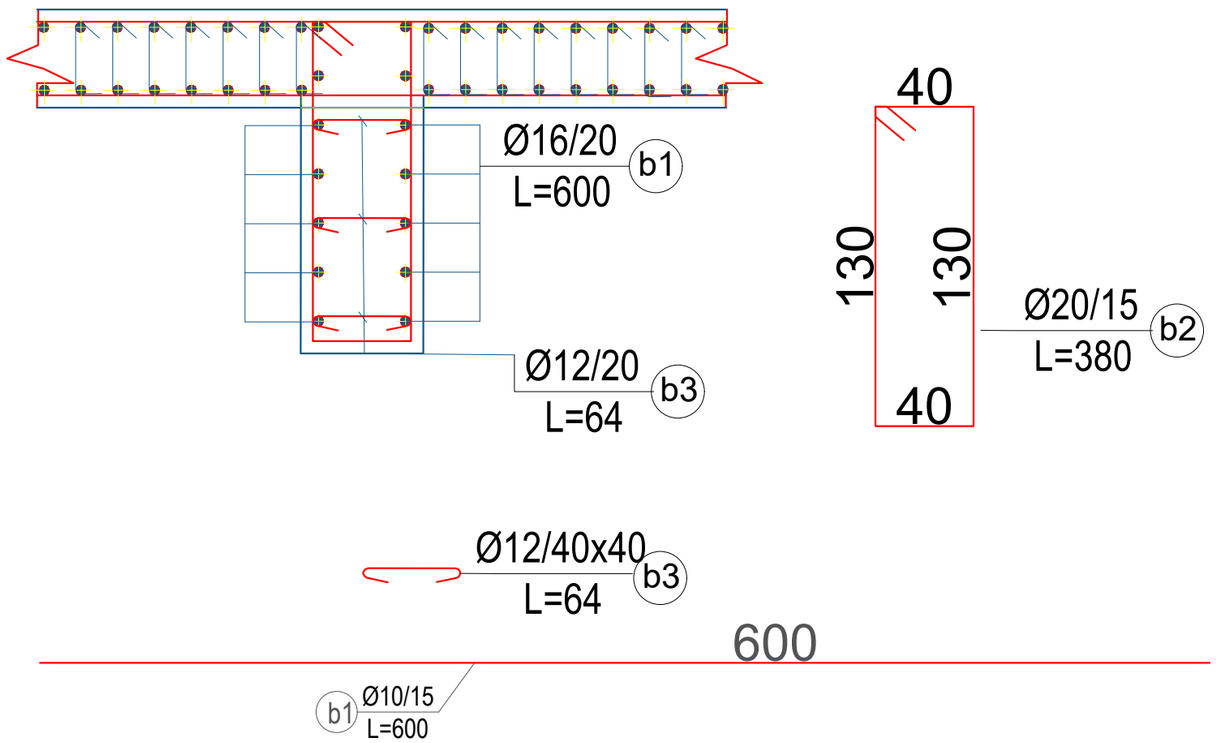

ELEMENTI		SPECIFIKIMI I ARMATURES					SPECIFIKIMI I ELEMENTIT			TOTALI *(KG)*
Tipi	Cop	Poz	Φ	l (cm)	cope	L (m)	Φ	ΣLtot*(m)*	Pesha *(per kg)*	
Shear Key Reinforcement (Km.6+738.8)	1	b1	16	600	10	60	*6*		*0.222*	
		b2	12	380	40	152	*8*		*0.395*	
		b3	12	64	45	28.8	*10*		*0.617*	
							12	181	*0.888*	161
							14		*1.208*	
							16	60	*1.578*	95
							18		*1.998*	
							20		*2.466*	
							22		*2.984*	
							24		*3.551*	
							25		*3.853*	
	HEKUR /REINFORCEMENT (1 cope)								KG	**255**
	HEKUR /REINFORCEMENT (4 cope)								KG	**1021**
	BETON C30/37 / CONCRETE C30/37 (1 cope)								M^3	**3**
	BETON C30/37 / CONCRETE C30/37 (4 cope)								M^3	**12**

MATERIALET

TOMBINO KUTI : B/ARME C30/37

SHTRESE E VARFER : BETON C12/15

HEKURI: B500C, fyk=500MPa

SHTRESA MBROJTESE 5-10cm

INVESTITORI / INVESTOR
"Autoriteti Rrugor Shqiptar"
Address: Rr. "Sami Frasheri", Nr 33, Tirane
Mob: 04 222 3600
E-mail: info@arrsh.gov.al

JV: "InfraKonsult" shpk & "HMK-Consulting" shpk

"Studim Projektim - Zgjerimi i segmentit rrugor dalje Elbasan-Prrenjas-Qafe Thane", (Faza II) / "Design Study of road segment exit Elbasan-Prrenjas-Qafe Thane" (Phase II)

Detaj i Dhembit dhe Tabela e Hekurit / Shear Key Reinforcement & Bar Specification Km 6+738.80

FAZA - PROJEKT ZBATIM
PHASE - DETAIL DESIGN

SHKALLA *1:25*
SCALE *1:25*

Data: Mars 2023
Date: March 2023

VIZATIMI Nr:
PAGE No: *E (4)*

PROJEKTUES:
DESIGN ENGINEERS:
Ing./Eng. Sokol METOJA
Ing./Eng. Redi STRUGA
Ing./Eng. Orgest MËRTIKA

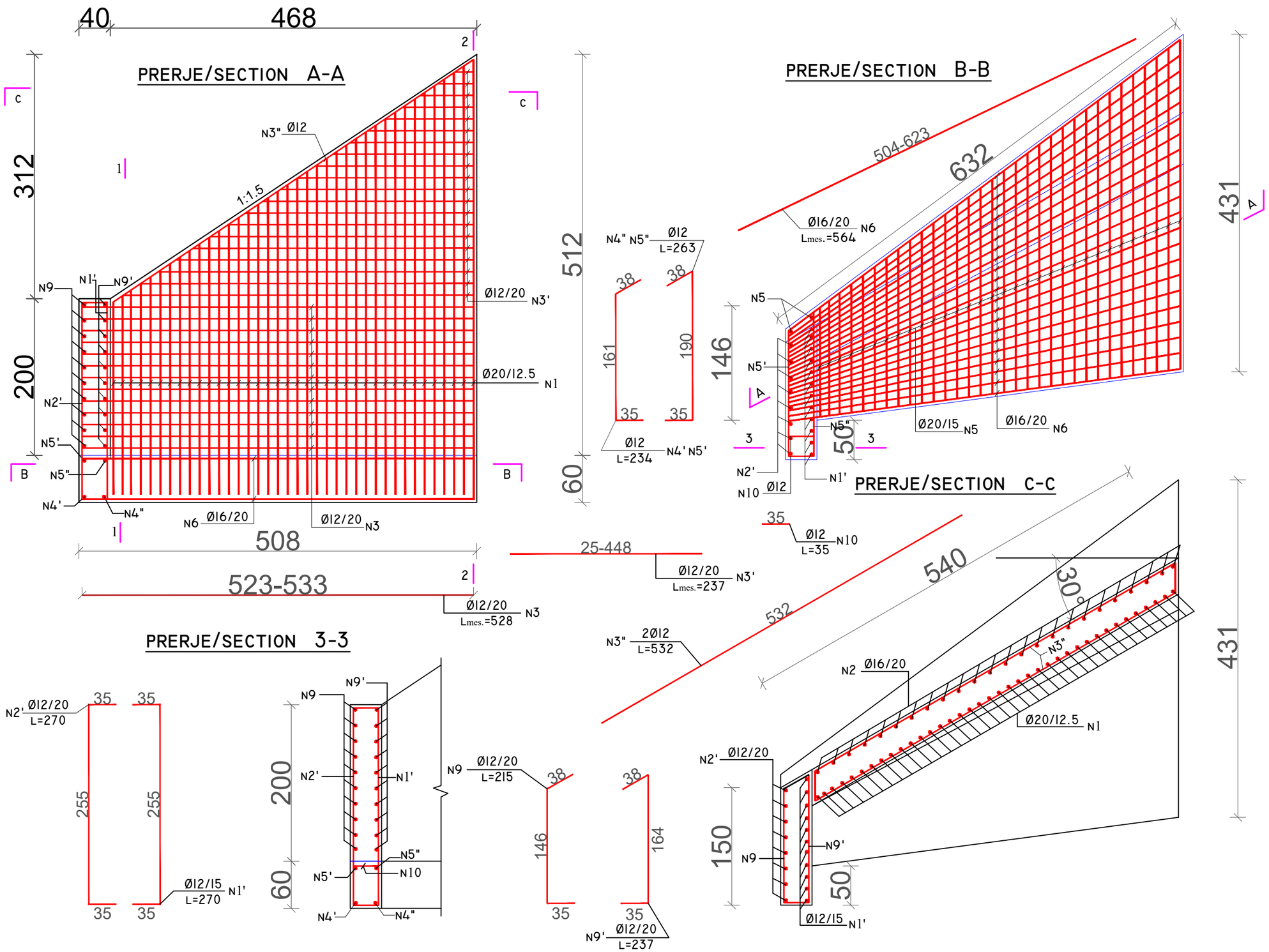

INVESTITORI / INVESTOR

"Autoriteti Rrugor Shqiptar"

Address: Rr. "Sami Frasheri", Nr 33, Tirane

Mob: 04 222 3600

E-mail: info@arrsh.gov.al

JV: "InfraKonsult" shpk & "HMK-Consulting" shpk

"Studim Projektim - Zgjerimi i segmentit rrugor dalje Elbasan-Prrenjas-Qafe Thane", (Faza II) / "Design Study of road segment exit Elbasan-Prrenjas-Qafe Thane" (Phase II)

Armimi i Speroneve te Hyrjes dhe Daljes per Tombinon Kuti 3.5 x 5 m / Reinforcement of Inlet and Outlet Walls for Box Culvert 3.5 x 5 m Km 6+738.80

FAZA - PROJEKT ZBATIM
PHASE - DETAIL DESIGN

SHKALLA / SCALE	1:50 / 1:50	Data: Mars 2023 / Date: March 2023
VIZATIMI / PAGE	Nr: / No: E (5)	

PROJEKTUES:
DESIGN ENGINEERS:

Ing./Eng. Sokol METOJA
Ing./Eng. Redi STRUGA
Ing./Eng. Orgest MËRTIKA

PRERJE/SECTION 1-1

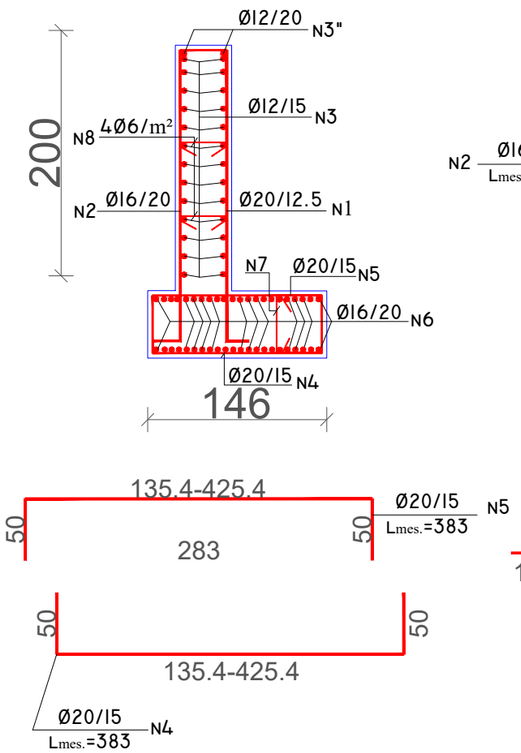

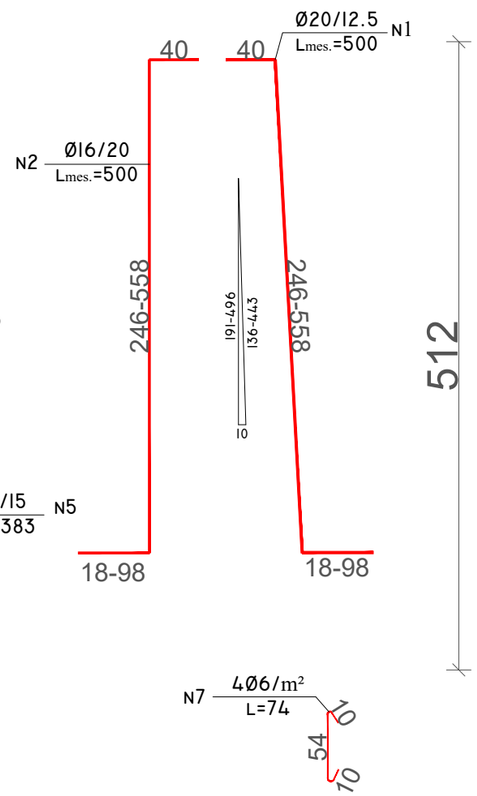

PRERJE/SECTION 2-2

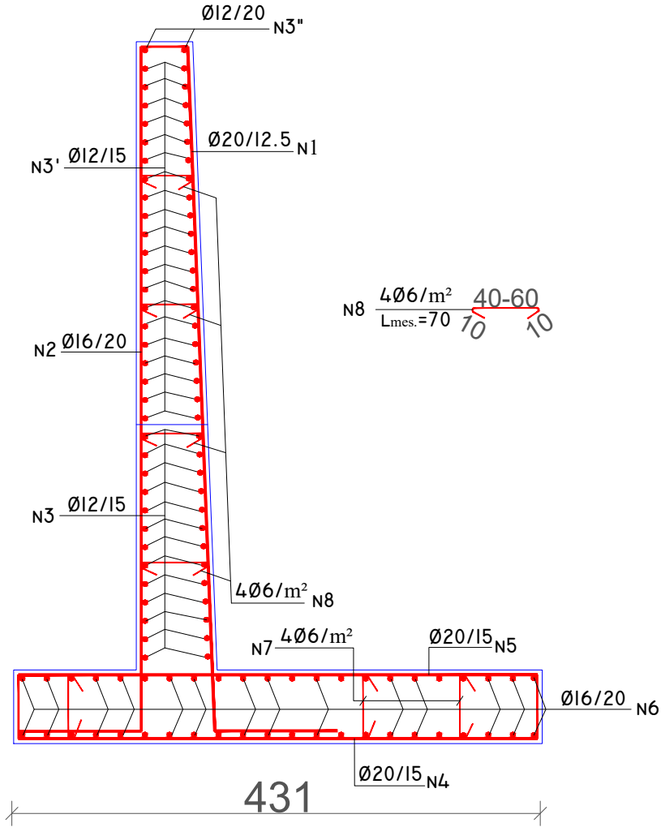

TABELA E HEKURIT PER NJE SPERON
BAR SPECIFICATION FOR I WALL

NR. POZ.	Ø mm	L cm	SASIA cope	L m	PERMBLEDHJE E ARMATURES Ø mm	ΣL m	PESHA kg/ml	PESHA kg
1	20	500	38	190.00	6	88.08	0.222	19.55
1'	12	270	12	32.40	12	352.21	0.888	312.76
2	16	500	24	120.00	16	368.16	1.578	580.96
2'	12	270	8	21.60	20	435.12	2.466	1073.01
3	12	528	26	137.28				
3'	12	237	40	94.80				
3"	12	532	2	10.64				
4	20	383	32	122.56				
4'	12	234	1	2.34				
4"	12	263	1	2.63				
5	20	383	32	122.56				
5'	12	234	1	2.34				
5"	12	263	1	2.63				
6	16	564	44	248.16				
7	6	74	67	49.58				
8	6	70	55	38.50				
9	12	215	10	21.50				
9'	12	237	10	23.70				
10	12	35	1	0.35				
HEKURI PERIODIK/STEEL WEIGHT							kg	1986.28
BETON/ CONCRETE C30/37							m³	16.83

INVESTITORI / INVESTOR
"Autoriteti Rrugor Shqiptar"
Address: Rr. "Sami Frasheri", Nr 33, Tirane
Mob: 04 222 3600
E-mail: info@arrsh.gov.al

JV: "InfraKonsult" shpk & "HMK-Consulting" shpk

"Studim Projektim - Zgjerimi i segmentit rrugor dalje Elbasan-Prrenjas-Qafe Thane", (Faza II) / "Design Study of road segment exit Elbasan-Prrenjas-Qafe Thane" (Phase II)

Armimi i speronit se Tombinos Kuti 3.5 x 5 m / Box Culvert 3.5 x 5 m wall Reinforcement Km 6+738.80

FAZA - PROJEKT ZBATIM
PHASE - DETAIL DESIGN

SHKALLA / SCALE 1:50 1:50

Data: Mars 2023
Date: March 2023

VIZATIMI Nr: / PAGE No: E (6)

PROJEKTUES: / DESIGN ENGINEERS:
Ing./Eng. Sokol METOJA
Ing./Eng. Redi STRUGA
Ing./Eng. Orgest MËRTIKA

Armimi i Soletes Rakorduse/Approach slab reinforcement sh./sc. 1:50

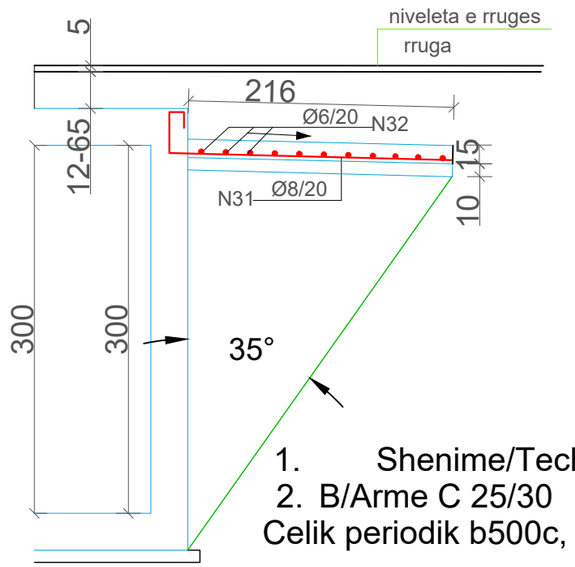

1. Shenime/Technical notes
2. B/Arme C 25/30

Celik periodik b500c, fyk= 500Mpa

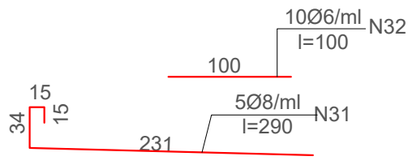

Soleta Rakorduese / Approach Slab						
Pozicioni / Position	Sasia (cope) / Pieces	∅ (mm)	L (cm)	Gjatesia Totale (m) / Total Length (m)	Pesha (njesi) / Weight (unit)	Pesha (kg) / Weight (kg)
31	5	8	290	14.50	0.394	6
32	11	6	100	11.00	0.222	2
Σ						**8.16**
Beton / Concrete m3/ml						**0.54**

Armimi i Parapetit/Top beam reinforcement sh./sc. 1:50

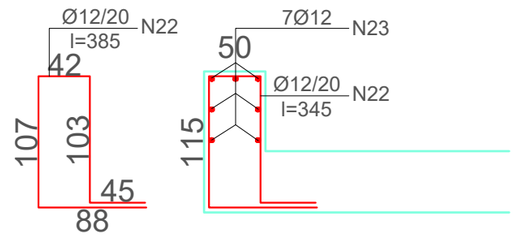

Parapeti / top Baem						
Pozicioni / Position	Sasia (cope) /	∅ (mm)	L (cm)	Gjatesia Totale (m) /	Pesha (njesi) /	Pesha (kg) /
22	5	12	385	19.25	0.887	17
23	7	12	100	7.00	0.887	6
Σ						**23.29**
Beton / Concrete m3/ml						**0.50**

INVESTITORI / INVESTOR
"Autoriteti Rrugor Shqiptar"
Address: Rr. "Sami Frasheri", Nr 33, Tirane
Mob: 04 222 3600
E-mail: info@arrsh.gov.al

JV: "InfraKonsult" shpk & "HMK-Consulting" shpk

"Studim Projektim - Zgjerimi i segmentit rrugor dalje Elbasan-Prrenjas-Qafe Thane", (Faza II) / "Design Study of road segment exit Elbasan-Prrenjas-Qafe Thane" (Phase II)

Armimi i Soletes Rakorduese dhe Parapetit / Approach Slab and Top Beam Reinforcement Km 6+738.80

FAZA - PROJEKT ZBATIM
PHASE - DETAIL DESIGN

SHKALLA 1:50 *SCALE* 1:50

Data: Mars 2023
Date: March 2023

VIZATIMI Nr: PAGE No: *E (7)*

PROJEKTUES:
DESIGN ENGINEERS:
Ing./Eng. Sokol METOJA
Ing./Eng. Redi STRUGA
Ing./Eng. Orgest MËRTIKA

Tombino Box/Box Culvert 2.5 x 2.5 m
Planimetria/Planview Sh/Sc 1:200

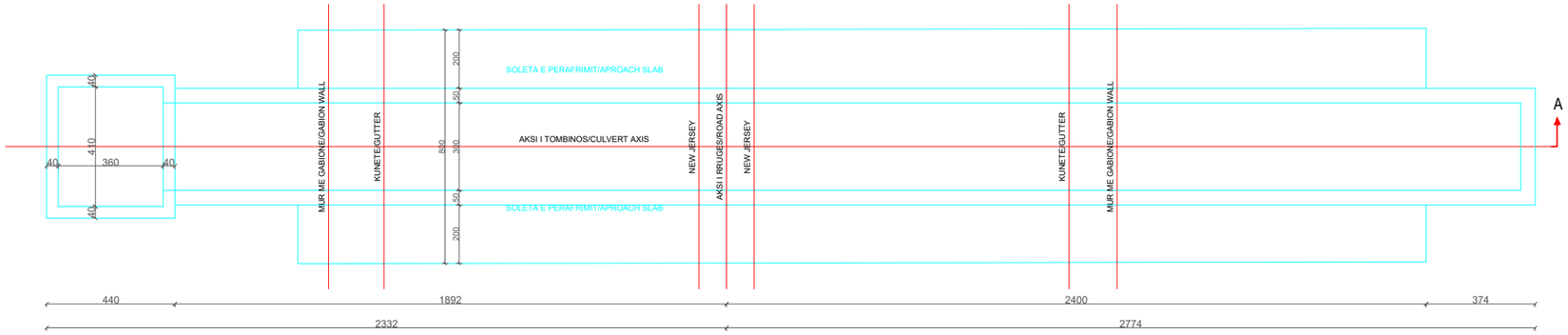

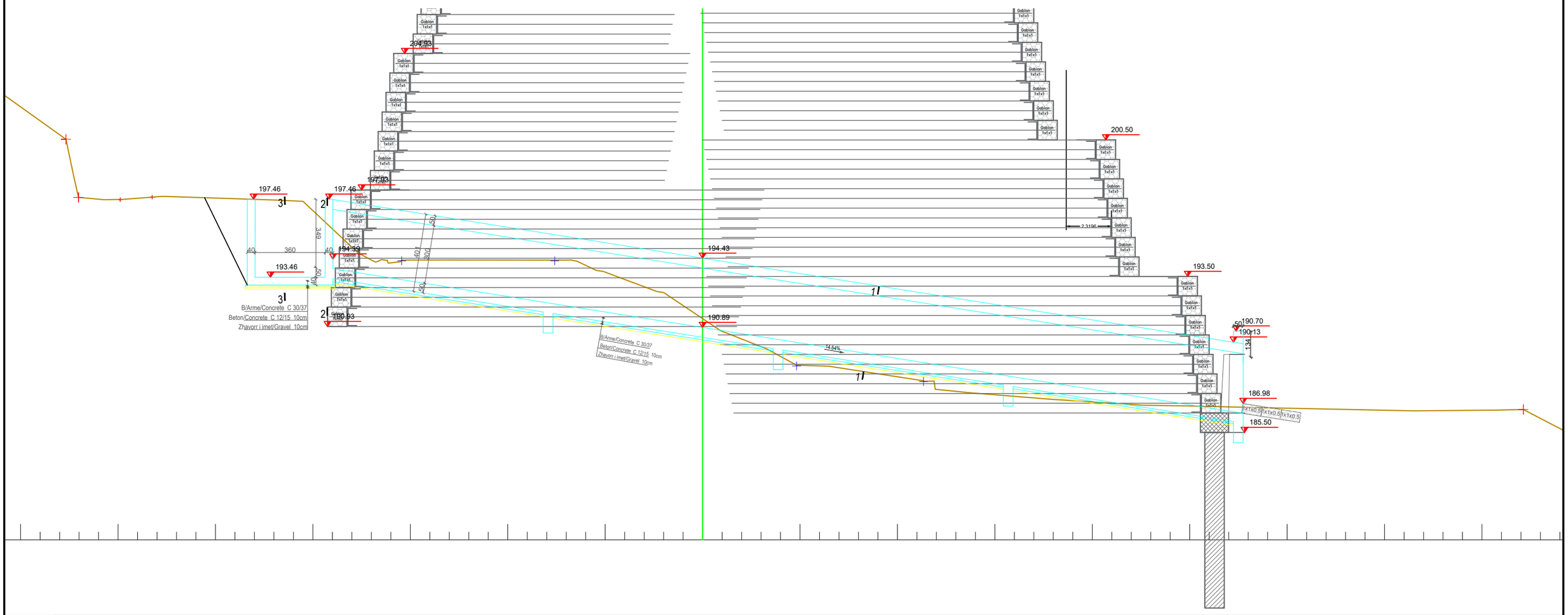

INVESTITORI / INVESTOR
"Autoriteti Rrugor Shqiptar"
Address: Rr. "Sami Frasheri", Nr 33, Tirane
Mob: 04 222 3600
E-mail: info@arrsh.gov.al

InfraKonsult konsulence inxhinierike
HMK-CONSULTING SH.P.K Konsulence-Projektim-Mbikqyrje
JV: "InfraKonsult" shpk & "HMK-Consulting" shpk

"Studim Projektim - Zgjerimi i segmentit rrugor dalje Elbasan-Prrenjas-Qafe Thane", (Faza II) / "Design Study of road segment exit Elbasan-Prrenjas-Qafe Thane" (Phase II)

Tombino Kuti 3.0 x 3.0 m / Box Culvert 3.0 x 3.0 m - Km 8+006.00

FAZA - PROJEKT ZBATIM
PHASE - DETAIL DESIGN

SHKALLA	*1:200*	*Data: Mars 2023*
SCALE	*1:200*	*Date: march 2023*
VIZATIMI Nr:	*E (1)*	
PAGE No:		

PROJEKTUES:
DESIGN ENGINEERS:
Ing./Eng. Sokol METOJA
Ing./Eng. Redi STRUGA
Ing./Eng. Orgest MËRTIKA

PRERJA/SECTION 1-1
Sh/Sc 1:50

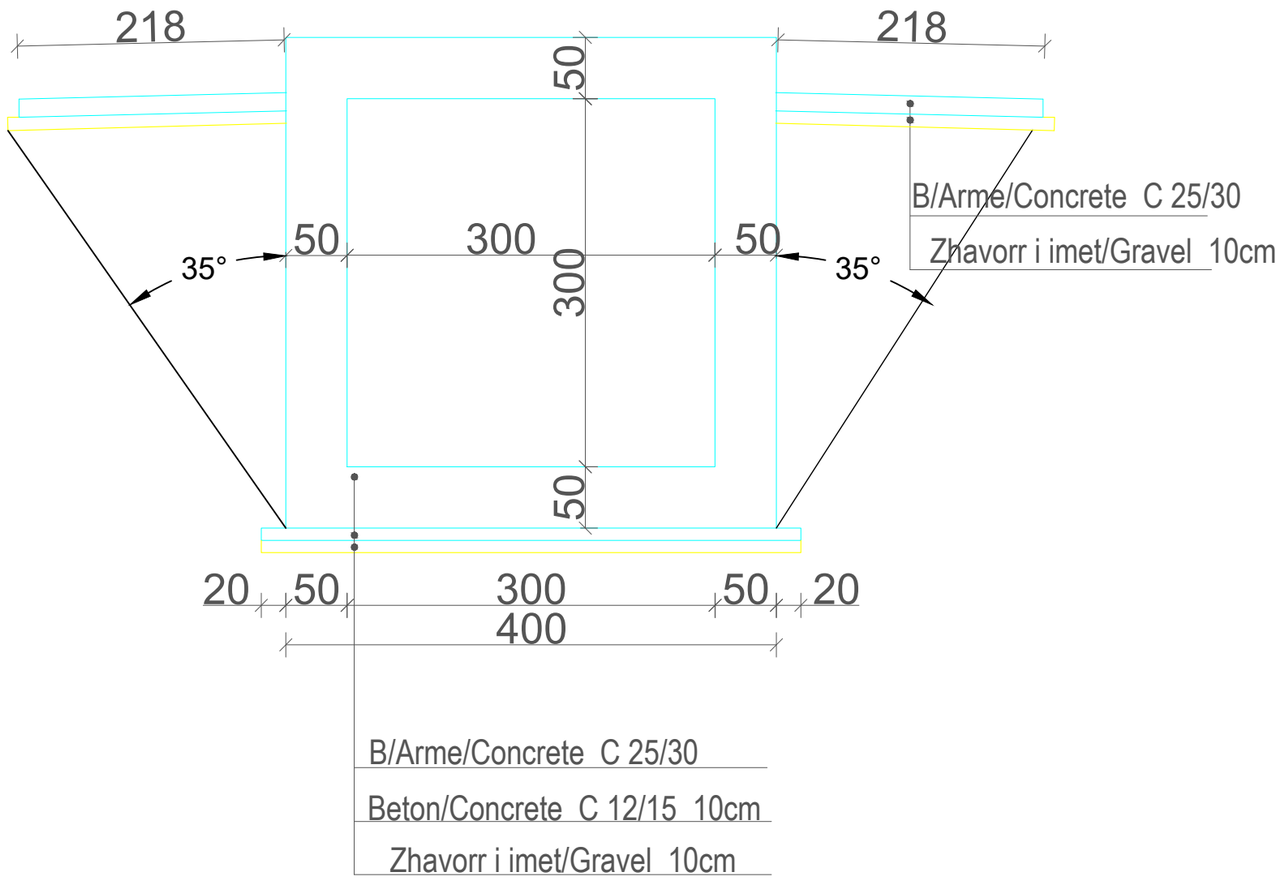

Armimi i Soletes Rakorduse/Approach slab reinforcement
sh./sc. 1:50

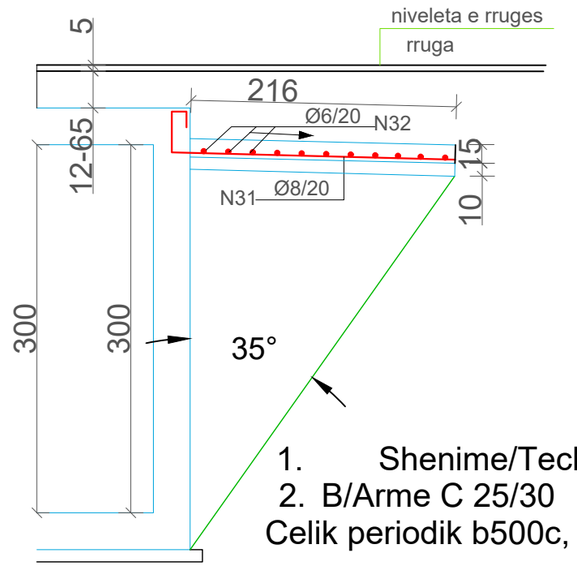

1. Shenime/Technical notes
2. B/Arme C 25/30

Celik periodik b500c, fyk= 500Mpa

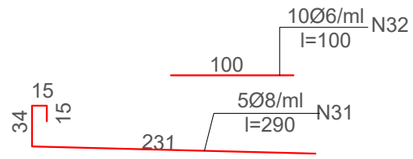

Soleta Rakorduese / Approach Slab						
Pozicioni / Position	Sasia (cope) / Pieces	Ø (mm)	L (cm)	Gjatesia Totale (m) / Total Length (m)	Pesha (njesi) / Weight (unit)	Pesha (kg) / Weight (kg)
31	5	8	290	14.50	0.394	6
32	11	6	100	11.00	0.222	2
Σ						8.16
Beton / Concrete m3/ml						0.54

INVESTITORI / INVESTOR
"Autoriteti Rrugor Shqiptar"
Address: Rr. "Sami Frasheri", Nr 33, Tirane
Mob: 04 222 3600
E-mail: info@arrsh.gov.al

JV: "InfraKonsult" shpk & "HMK-Consulting" shpk

"Studim Projektim - Zgjerimi i segmentit rrugor dalje Elbasan-Prrenjas-Qafe Thane", (Faza II) / "Design Study of road segment exit Elbasan-Prrenjas-Qafe Thane" (Phase II)

Prerja e Tombino Kuti 3.0 x 3.0 m dhe armim i soletes rakorduese / Box Culvert 3.0 x 3.0 m cross section & Approach slab reinforcement - Km 8+006.00

FAZA - PROJEKT ZBATIM
PHASE - DETAIL DESIGN

SHKALLA / SCALE	1:50	Data: Mars 2023 / Date: march 2023
VIZATIMI / PAGE	Nr: / No: E (2)	

PROJEKTUES: / DESIGN ENGINEERS:
Ing./Eng. Sokol METOJA
Ing./Eng. Redi STRUGA
Ing./Eng. Orgest MËRTIKA

ARMIMI I TOMBINOS KUTI 3.0 m x 3.0 m (PER 1ml) Sh 1:50

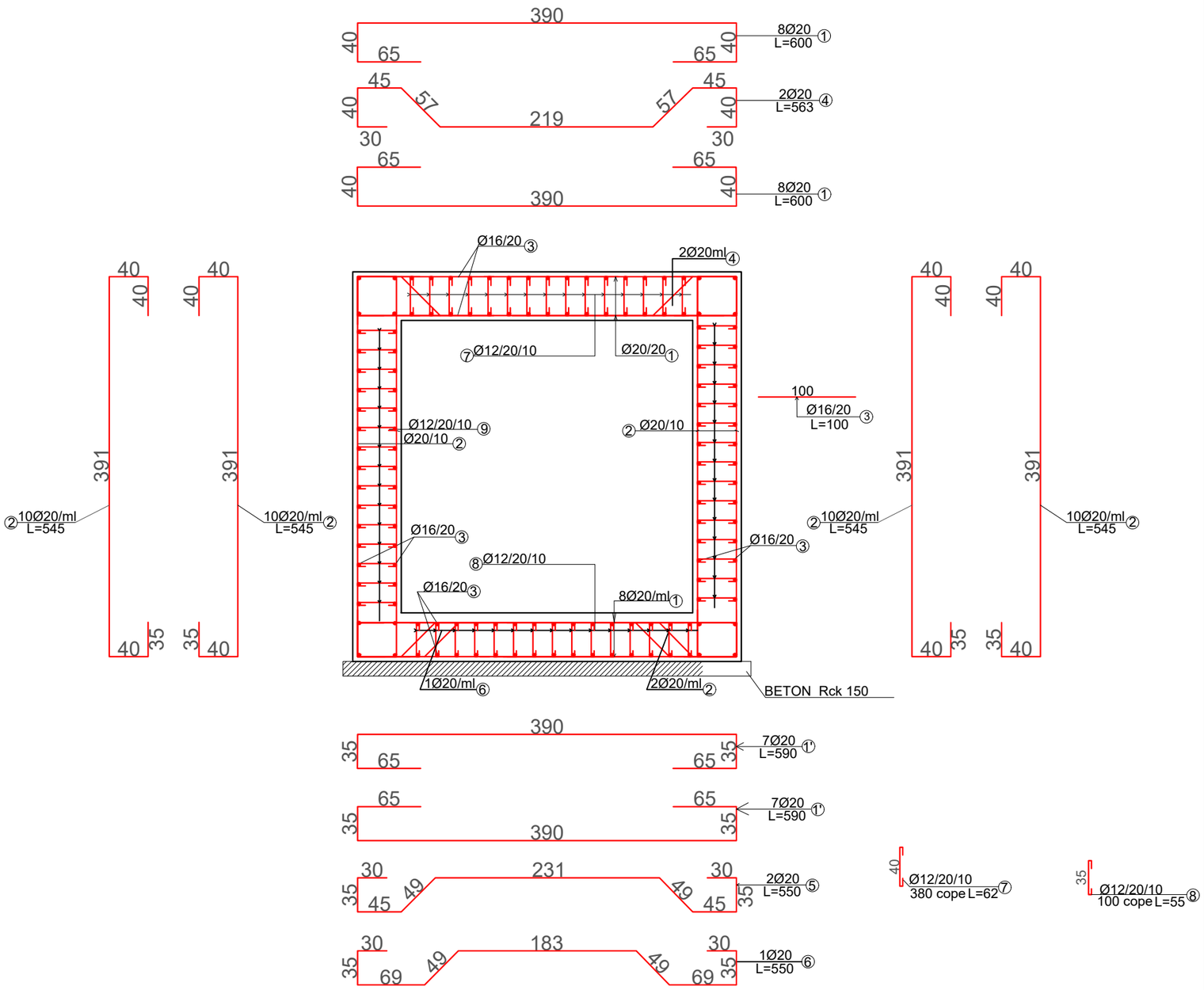

ELEMENTI		SPECIFIKIMI I ARMATURES					SPECIFIKIMI I ELEMENTIT			TOTALI (KG)
Tipi	Cop	Poz	Φ	l (cm)	cope	L (m)	Φ	ΣLtot(m)	Pesha (per kg)	
Tombino 3.0*3.0	1	1	20	600	16	96	6		0.222	
		1'	20	590	14	82.6	8		0.395	
		2	20	545	40	218	10		0.617	
		3	16	100	136	136	12	362	0.888	321
		4	20	563	2	11.26	14		1.208	
		5	20	550	2	11	16	136	1.578	215
		6	20	550	1	5.5	18		1.998	
		7	12	62	450	279	20	424	2.466	1047
		8	12	55	150	82.5	22		2.984	
							24		3.551	
							25		3.853	
										1582
		BETON C30/37								331.1
		BETON C12/15								29.8

MATERIALET

TOMBINO KUTI : B/ARME C30/37

SHTRESE E VARFER : BETON C12/15

HEKURI: B500C, fyk=500MPa

SHTRESA MBROJTESE 5-10cm

INVESTITORI / INVESTOR
"Autoriteti Rrugor Shqiptar"
Address: Rr. "Sami Frasheri", Nr 33, Tirane
Mob: 04 222 3600
E-mail: info@arrsh.gov.al

JV: "InfraKonsult" shpk & "HMK-Consulting" shpk

"Studim Projektim - Zgjerimi i segmentit rrugor dalje Elbasan-Prrenjas-Qafe Thane", (Faza II) / "Design Study of road segment exit Elbasan-Prrenjas-Qafe Thane" (Phase II)

Armimi i Tombinos Kuti 3.0 x 3.0 m / Box Culvert 3.0 x 3.0 m reinforcement - Km 8+006.00

FAZA - PROJEKT ZBATIM
PHASE - DETAIL DESIGN

SHKALLA / SCALE	1:50	Data: Mars 2023 / Date: march 2023
VIZATIMI / PAGE	Nr: / No: E (3)	

PROJEKTUES: / DESIGN ENGINEERS:
Ing./Eng. Sokol METOJA
Ing./Eng. Redi STRUGA
Ing./Eng. Orgest MËRTIKA

DETAJI I DHEMBIT B/A 1:25
SHEAR KEY REINFORCEMENT

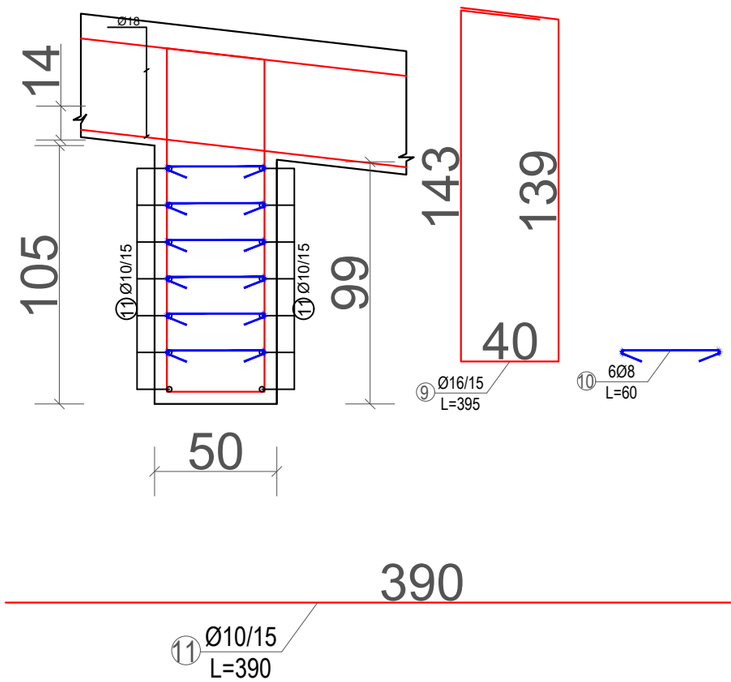

ELEMENTI		SPECIFIKIMI I ARMATURES					SPECIFIKIMI I ELEMENTIT			TOTALI *(KG)*
Tipi	Cop	Poz	Φ	l (cm)	cope	L (m)	Φ	ΣLtot*(m)*	Pesha *(per kg)*	
Shear key reinforcement	4	9	16	395	26	102.7	***6***		*0.222*	
		10	8	60	156	93.6	***8***	374	*0.395*	148
		11	10	390	14	54.6	***10***	218	*0.617*	135
							12		*0.888*	
							14		*1.208*	
							16	411	*1.578*	648
							18		*1.998*	
							20		*2.466*	
							22		*2.984*	
							24		*3.551*	
							25		*3.853*	
										931

Armimi i Parapetit/Top beam reinforcement
sh./sc. 1:50

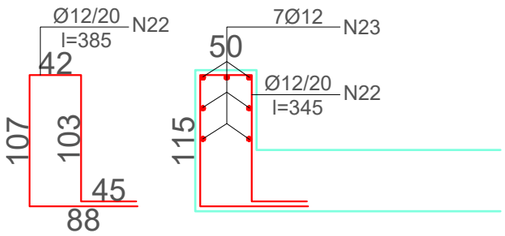

Parapeti / top Baem						
Pozicioni / Position	Sasia (cope) /	(mm)	L (cm)	Gjatesia Totale (m) /	Pesha (njesi) /	Pesha (kg) /
22	5	12	385	19.25	0.887	17
23	7	12	100	7.00	0.887	6
Σ						**23.29**
Beton / Concrete m3/ml						**0.50**

INVESTITORI / INVESTOR
"Autoriteti Rrugor Shqiptar"
Address: Rr. "Sami Frasheri", Nr 33, Tirane
Mob: 04 222 3600
E-mail: info@arrsh.gov.al

JV: "InfraKonsult" shpk & "HMK-Consulting" shpk

"Studim Projektim - Zgjerimi i segmentit rrugor dalje Elbasan-Prrenjas-Qafe Thane", (Faza II) / "Design Study of road segment exit Elbasan-Prrenjas-Qafe Thane" (Phase II)

Armimi i dhembit dhe parapetit / Shear key and top beam reinforcement - Km 8+006.00

FAZA - PROJEKT ZBATIM
PHASE - DETAIL DESIGN

SHKALLA / SCALE 1:25 1:50
Data: Mars 2023
Date: march 2023
VIZATIMI Nr: / PAGE No: E (4)

PROJEKTUES: / DESIGN ENGINEERS:
Ing./Eng. Sokol METOJA
Ing./Eng. Redi STRUGA
Ing./Eng. Orgest MËRTIKA

PRERJ/SECTION A-A Sh 1:60

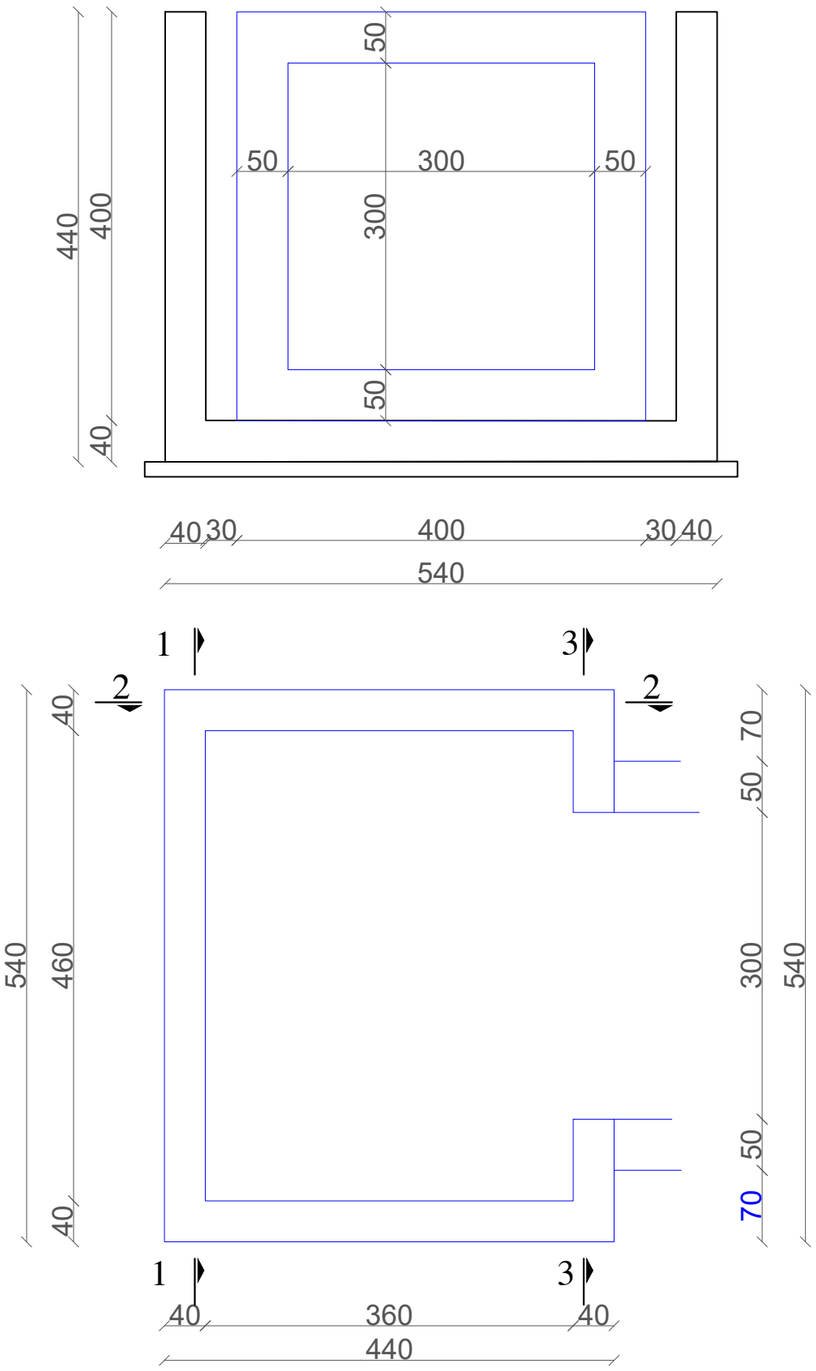

PRERJE/SECTION 1-1
Sh/Sc 1:60

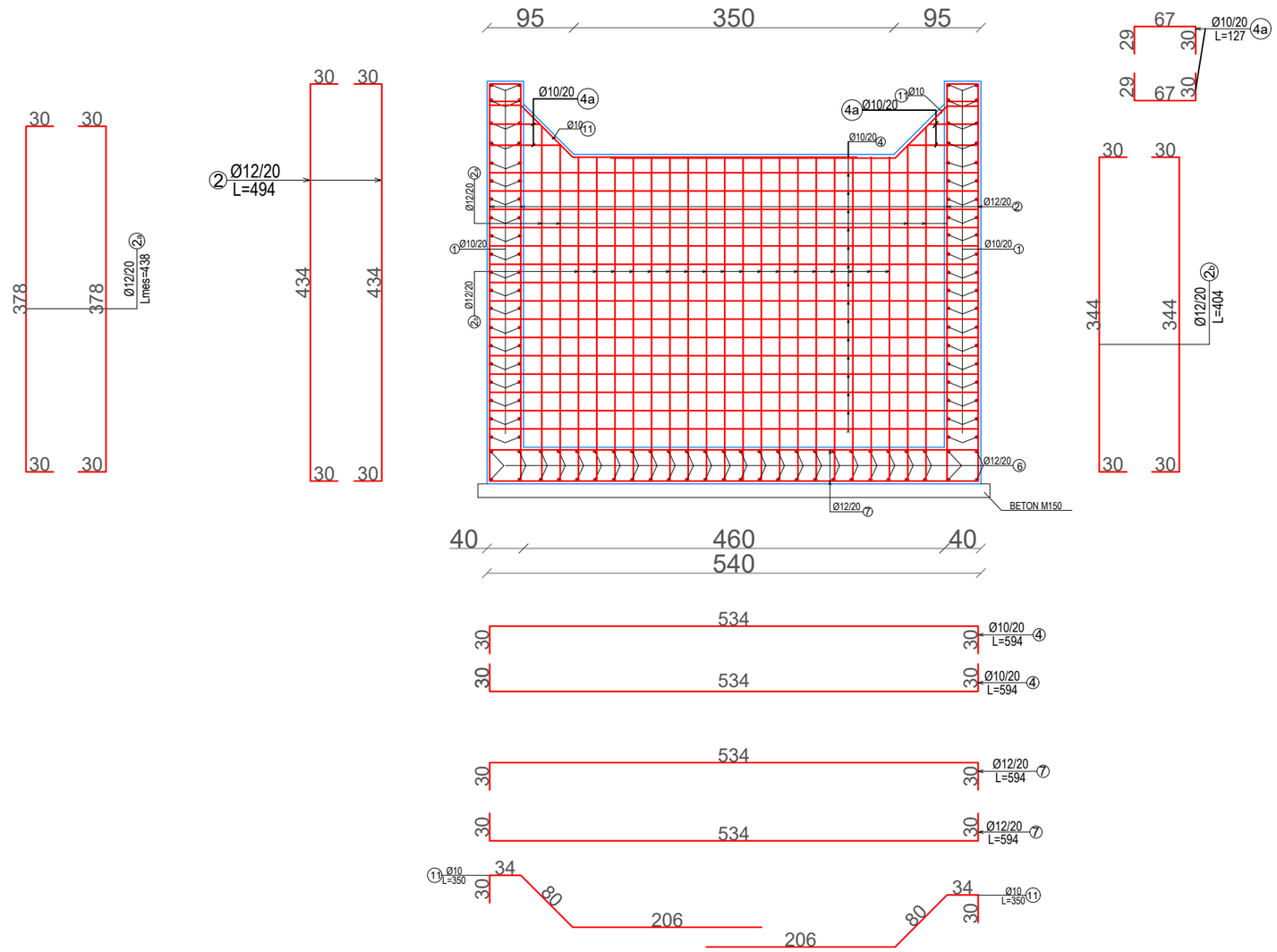

INVESTITORI / INVESTOR **"Autoriteti Rrugor Shqiptar"** **Address:** Rr. "Sami Frasheri", Nr 33, Tirane **Mob:** 04 222 3600 **E-mail:** info@arrsh.gov.al	***JV: "InfraKonsult" shpk & "HMK-Consulting" shpk***	***"Studim Projektim - Zgjerimi i segmentit rrugor dalje Elbasan-Prrenjas-Qafe Thane", (Faza II) / "Design Study of road segment exit Elbasan-Prrenjas-Qafe Thane" (Phase II)*** ***Armimi i pusetes / Manhole reinforcement - Km 8+006.00***	FAZA - PROJEKT ZBATIM PHASE - DETAIL DESIGN *SHKALLA / SCALE 1:60* *Data: Mars 2023 / Date: march 2023* *VIZATIMI Nr: / PAGE No: E (5)*

PROJEKTUES:
DESIGN ENGINEERS:
Ing./Eng. Sokol METOJA
Ing./Eng. Redi STRUGA
Ing./Eng. Orgest MËRTIKA

PRERJE/SECTION 2-2
Sh/Sc 1:100

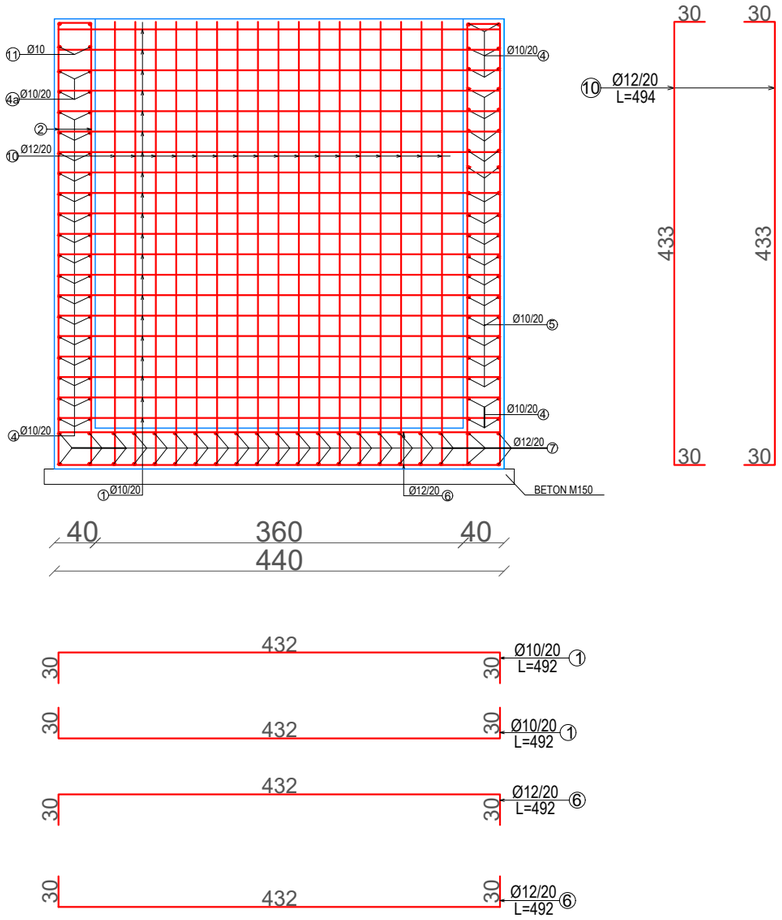

PRERJE 3-3 Sh 1:100

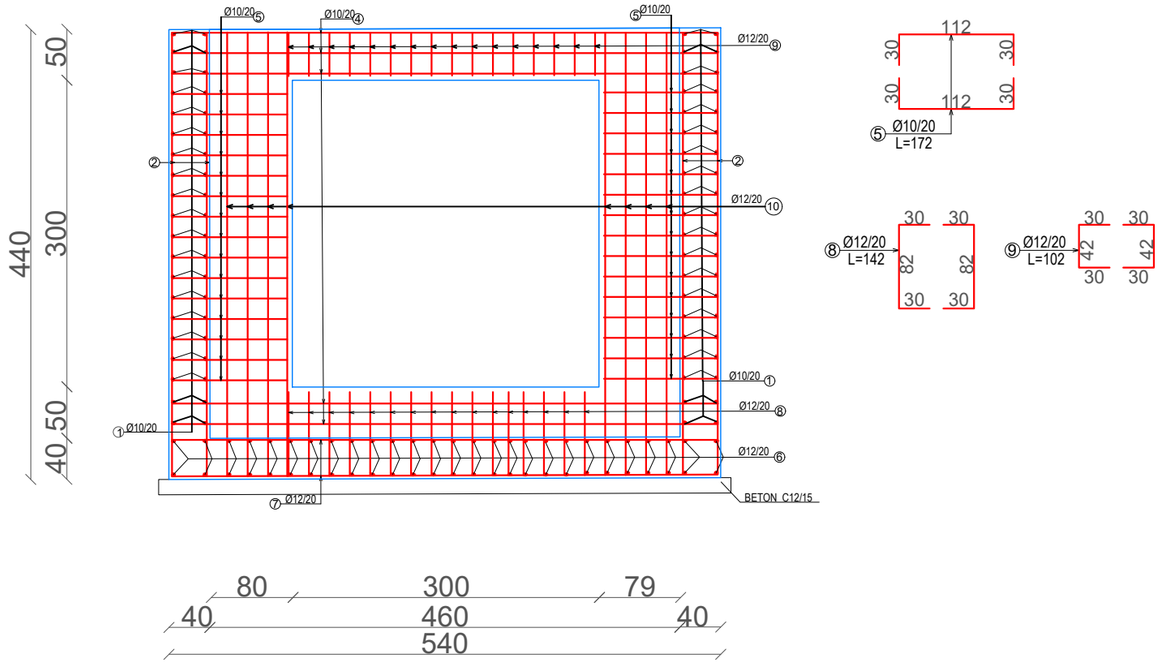

ELEMENTI		SPECIFIKIMI I ARMATURES					SPECIFIKIMI I ELEMENTIT			TOTALI *(KG)*
Tipi	Cop	Poz	Φ	l (cm)	cope	L (m)	Φ	ΣLtot*(m)*	Pesha *(per kg)*	
Armimi I Pusetes	1	1	10	492	80	393.6	**6**		*0.222*	
		2	12	494	16	79.04	**8**		*0.395*	
		2a	12	438	8	35.04	**10**	748	*0.617*	485
		2b	12	404	36	145.44	**12**	1258	*0.888*	1174
		4	10	594	40	237.6	**14**		*1.208*	
		5	10	172	60	103.2	**16**		*1.578*	
		6	12	492	52	255.84	**18**		*1.998*	
		7	12	594	42	249.48	**20**		*2.466*	
		8	12	142	32	45.44	**22**		*2.984*	
		9	12	102	32	32.64	**24**		*3.551*	
		10	12	494	84	414.96	**25**		*3.853*	
		11	10	350	4	14				
										1659
BETON PUSETE C30/37								**M3**		32.21
BETON PUSETE C12/15								**M3**		4.17

INVESTITORI / INVESTOR
"Autoriteti Rrugor Shqiptar"
Address: Rr. "Sami Frasheri", Nr 33, Tirane
Mob: 04 222 3600
E-mail: info@arrsh.gov.al

JV: "InfraKonsult" shpk & "HMK-Consulting" shpk

"Studim Projektim - Zgjerimi i segmentit rrugor dalje Elbasan-Prrenjas-Qafe Thane", (Faza II) / "Design Study of road segment exit Elbasan-Prrenjas-Qafe Thane" (Phase II)

Armimi i pusetes / Manhole reinforcement - Km 8+006.00

FAZA - PROJEKT ZBATIM
PHASE - DETAIL DESIGN

SHKALLA / SCALE 1:60
Data: Mars 2023 / Date: march 2023
VIZATIMI Nr: / PAGE No: E (6)

PROJEKTUES: / DESIGN ENGINEERS:
Ing./Eng. Sokol METOJA
Ing./Eng. Redi STRUGA
Ing./Eng. Orgest MËRTIKA

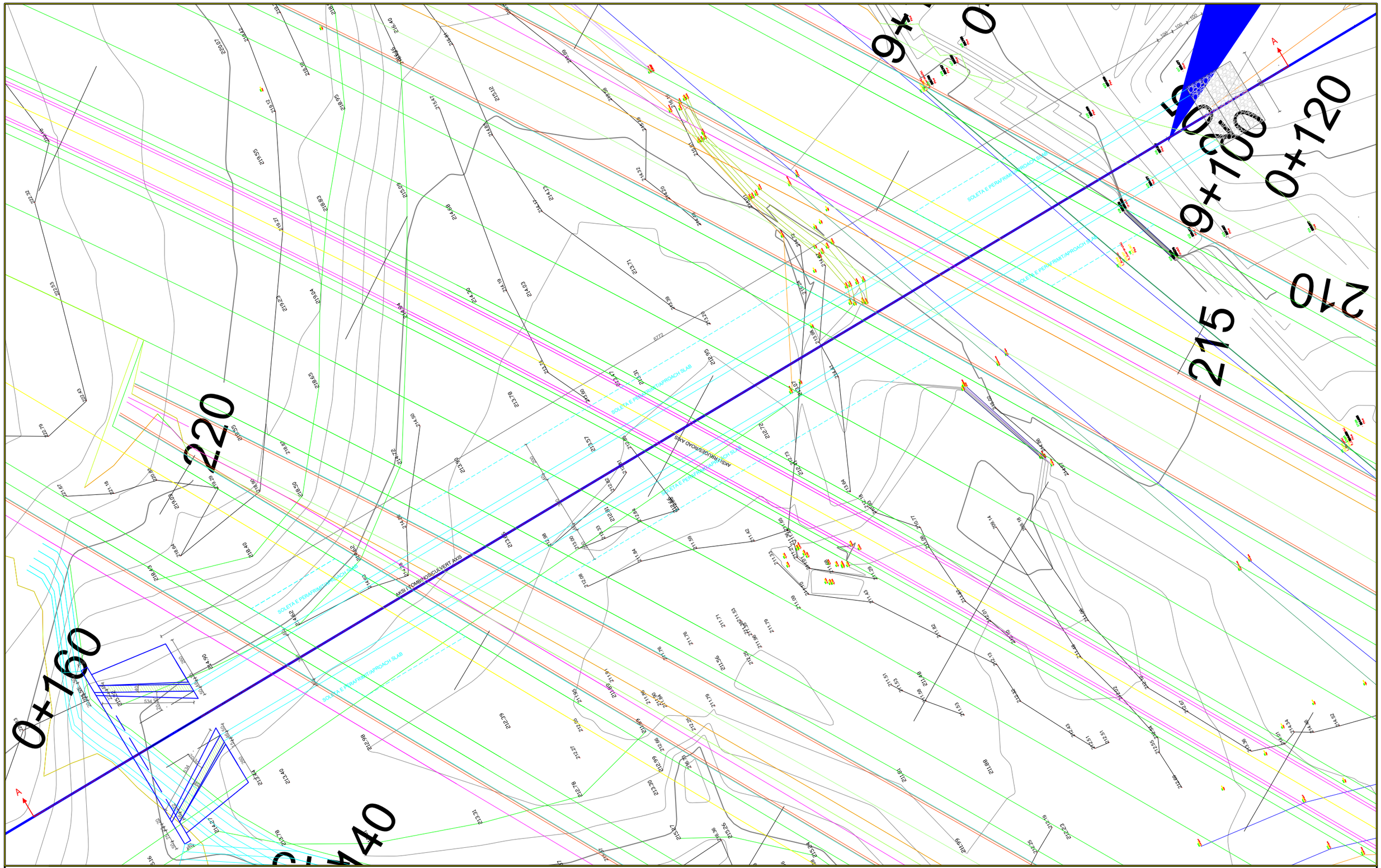

INVESTITORI / INVESTOR

"Autoriteti Rrugor Shqiptar"

Address: Rr. "Sami Frasheri", Nr 33, Tirane

Mob: 04 222 3600
E-mail: info@arrsh.gov.al

JV: "InfraKonsult" shpk & "HMK-Consulting" shpk

"Studim Projektim - Zgjerimi i segmentit rrugor dalje Elbasan-Prrenjas-Qafe Thane", (Faza II) / "Design Study of road segment exit Elbasan-Prrenjas-Qafe Thane" (Phase II)

Planimetria e Tombinos / Planview of Culvert Km 9+120.25

FAZA - PROJEKT ZBATIM
PHASE - DETAIL DESIGN

SHKALLA / SCALE	1:200 / 1:200	Data: Mars 2023 / Date: March 2023
VIZATIMI / PAGE	Nr: / No:	E (1)

PROJEKTUES / DESIGN ENGINEERS:

Ing./Eng. Sokol METOJA
Ing./Eng. Redi STRUGA
Ing./Eng. Orgest MËRTIKA

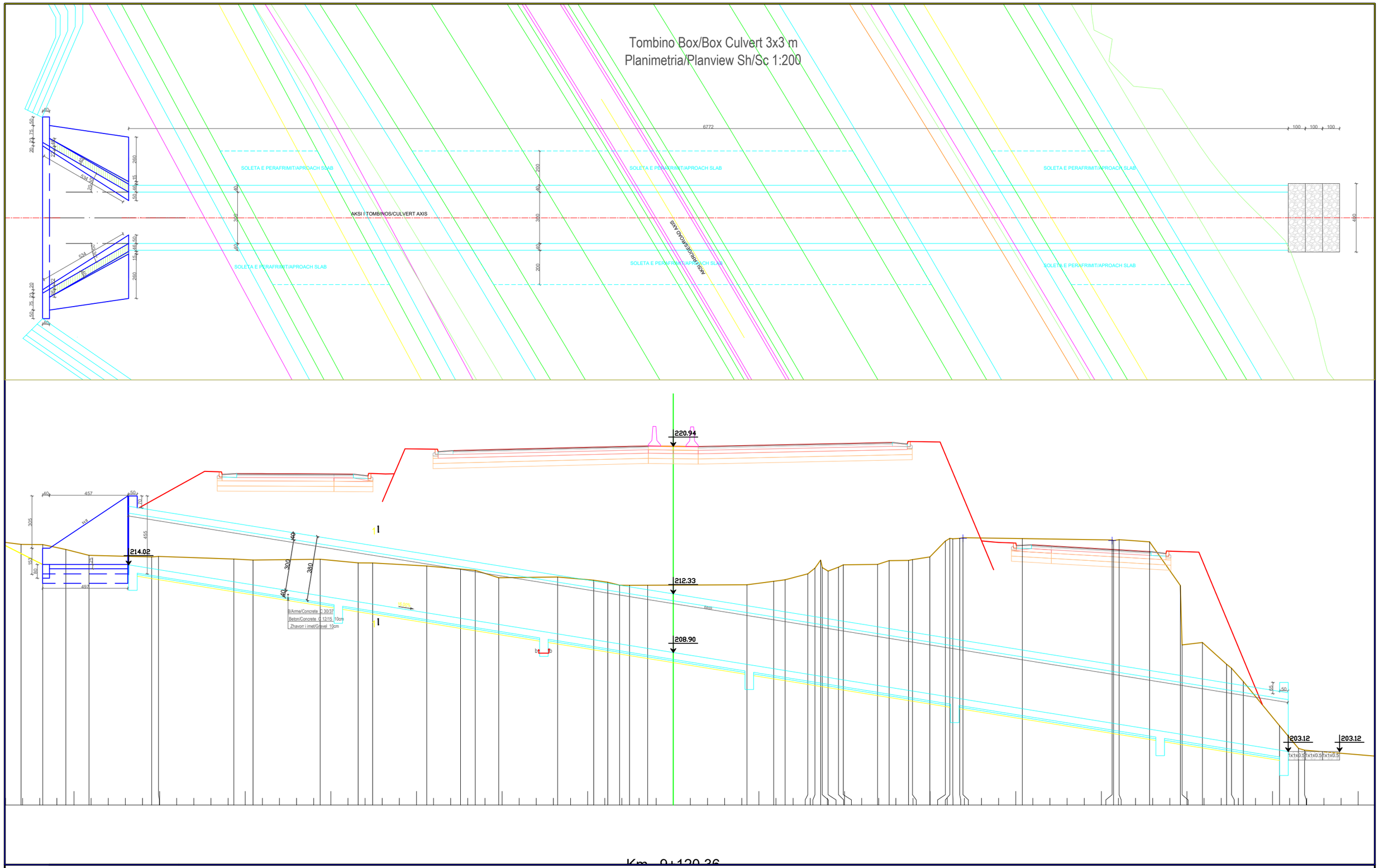

INVESTITORI / INVESTOR

"Autoriteti Rrugor Shqiptar"

Address: Rr. "Sami Frasheri", Nr 33, Tirane

Mob: 04 222 3600
E-mail: info@arrsh.gov.al

JV: "InfraKonsult" shpk & "HMK-Consulting" shpk

"Studim Projektim - Zgjerimi i segmentit rrugor dalje Elbasan-Prrenjas-Qafe Thane", (Faza II) / "Design Study of road segment exit Elbasan-Prrenjas-Qafe Thane" (Phase II)

Tombino Kuti 3.0x3.0 m / Box Culvert 3.0x3.0 m - Km 9+120.25

FAZA - PROJEKT ZBATIM
PHASE - DETAIL DESIGN

SHKALLA / SCALE	1:200 / 1:200	Data: Mars 2023 / Date: March 2023
VIZATIMI Nr: / PAGE No:	E (2)	

PROJEKTUES / DESIGN ENGINEERS:

Ing./Eng. Sokol METOJA
Ing./Eng. Redi STRUGA
Ing./Eng. Orgest MËRTIKA

PRERJA/SECTION 1-1
Sh/Sc 1:100

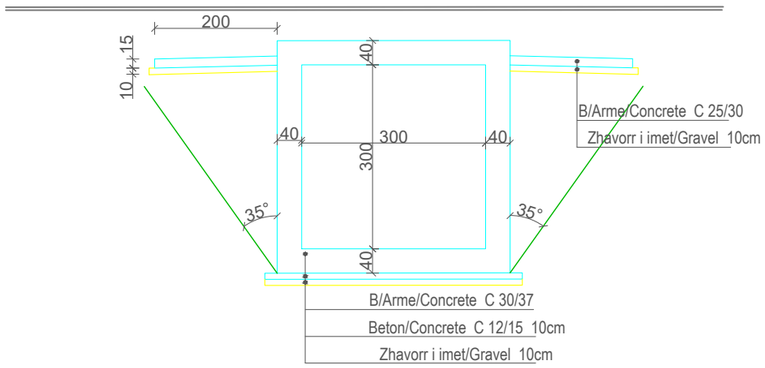

INVESTITORI / INVESTOR
"Autoriteti Rrugor Shqiptar"

Address: Rr. "Sami Frasheri", Nr 33, Tirane

Mob: 04 222 3600
E-mail: info@arrsh.gov.al

JV: "InfraKonsult" shpk & "HMK-Consulting" shpk

"Studim Projektim - Zgjerimi i segmentit rrugor dalje Elbasan-Prrenjas-Qafe Thane", (Faza II) / "Design Study of road segment exit Elbasan-Prrenjas-Qafe Thane" (Phase II)

Tombino Kuti 3.0x3.0 m / Box Culvert 3.0x3.0 m - Km 9+120.25

FAZA - PROJEKT ZBATIM
PHASE - DETAIL DESIGN

SHKALLA	*1:100*	*Data: Mars 2023*
SCALE	*1:100*	*Date: March 2023*
VIZATIMI Nr:		
PAGE No:	*E (3)*	

PROJEKTUES:
DESIGN ENGINEERS:
Ing./Eng. Sokol METOJA
Ing./Eng. Redi STRUGA
Ing./Eng. Orgest MËRTIKA

ARMIMI I TOMBINOS KUTI 3.0 m x 3.0 m Km.9+120.25 (PER 1ml) Sh 1:50

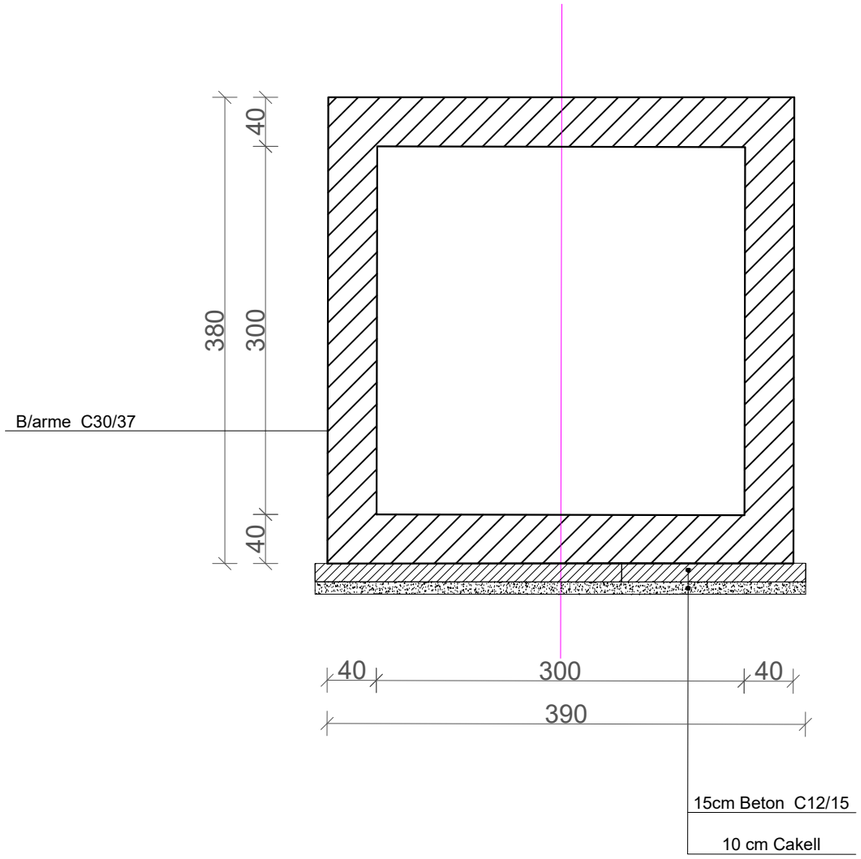

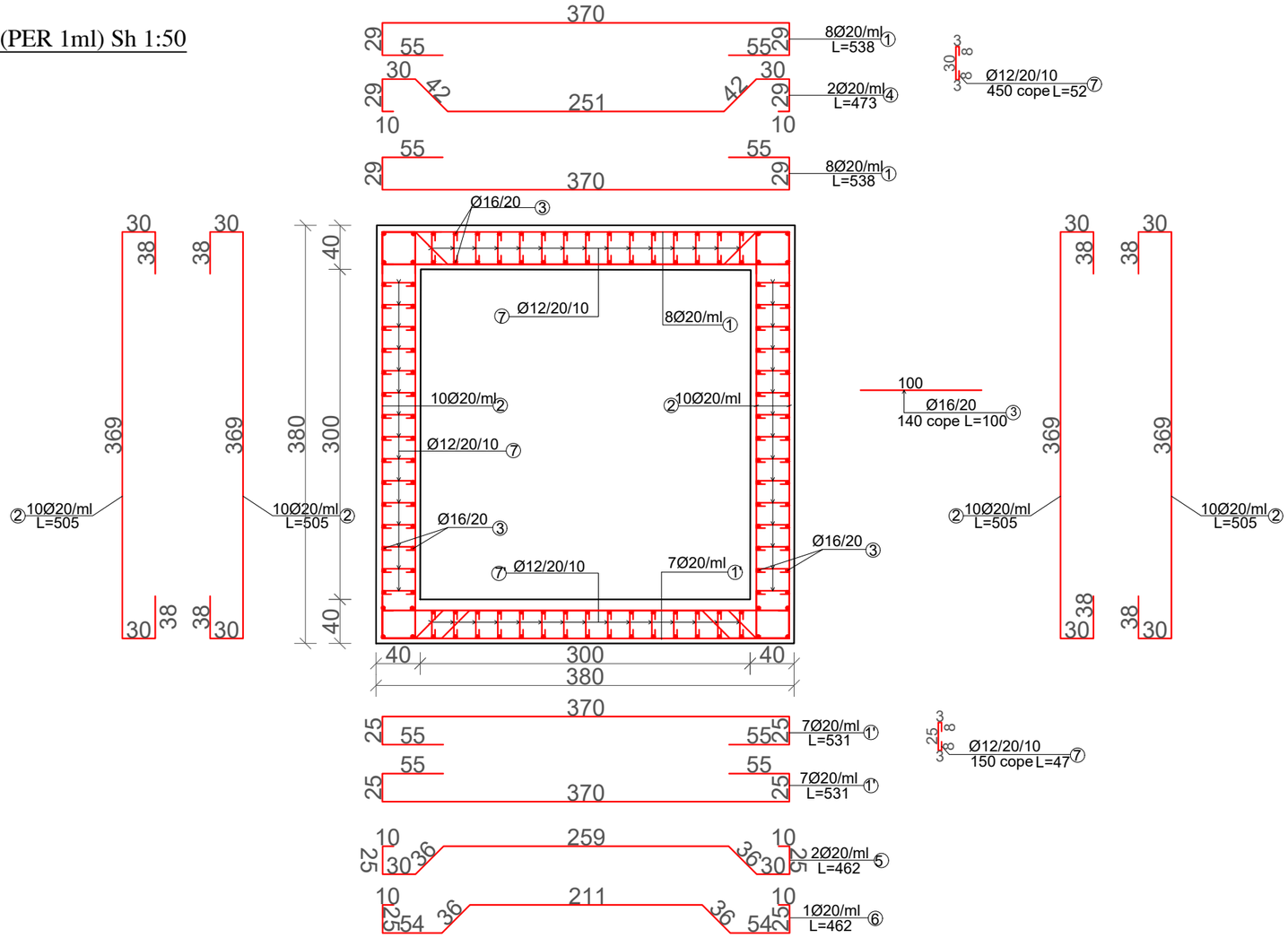

MATERIALET

TOMBINO KUTI : B/ARME C30/37

SHTRESE E VARFER : BETON C12/15

HEKURI: B500C, fyk=500MPa

SHTRESA MBROJTESE 5-10cm

ELEMENTI		SPECIFIKIMI I ARMATURES					SPECIFIKIMI I ELEMENTIT			TOTALI (KG)
Tipi	Cop	Poz	Φ	l (cm)	cope	L (m)	Φ	ΣLtot(m)	Pesha (per kg)	
Tombino 3 x 3 (Km.9+120.25)	1	1	20	538	16	86.08	6		0.222	
		1'	20	531	14	74.34	8		0.395	
		2	20	505	40	202	10		0.617	
		3	16	100	136	136	12	302	0.888	268
		4	20	473	2	9.46	14		1.208	
		5	20	462	2	9.24	16	136	1.578	215
		6	20	462	1	4.62	18		1.998	
		7	12	52	450	234	20	386	2.466	951
		7'	12	45	150	67.5	22		2.984	
							24		3.551	
							25		3.853	
HEKUR PER 1ML /REINFORCEMENT FOR 1ML									KG	1434
HEKUR PER 68.59 ML / REINFORCEMENT FOR 68.59 ML									KG	112693.4
BETON C30/37 PER 68.59 ML/ CONCRETE C30/37 FOR 68.59 ML									M³	373
BETON C12/15 PER 68.59 ML / CONCRETE C12/15 FOR 68.59 ML									M³	42

PRERJA/SECTION b-b
Sh/Sc 1:150

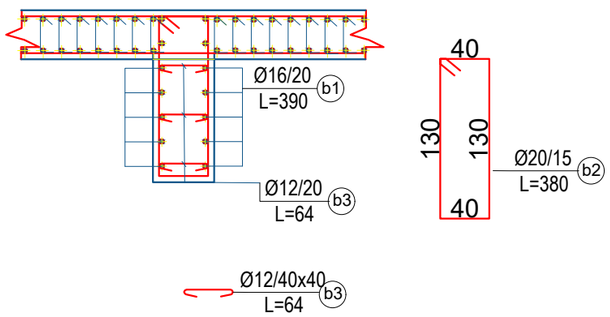

ELEMENTI		SPECIFIKIMI I ARMATURES					SPECIFIKIMI I ELEMENTIT			TOTALI (KG)
Tipi	Cop	Poz	Φ	l (cm)	cope	L (m)	Φ	ΣLtot(m)	Pesha (per kg)	
Dhembi poshte tombinos (Km.9+120.36)	1	b1	16	390	10	39	6		0.222	
		b2	12	380	26	98.8	8		0.395	
		b3	12	64	29	18.56	10		0.617	
							12	117	0.888	104
							14		1.208	
							16	39	1.578	62
							18		1.998	
							20		2.466	
							22		2.984	
							24		3.551	
							25		3.853	
HEKUR PER 1.6ML /REINFORCEMENT FOR 1.6ML (1 cope)									KG	166
HEKUR PER 1.6ML /REINFORCEMENT FOR 1.6ML (7 cope)									KG	1160
BETON C30/37 PER 1.6 ML/ CONCRETE C30/37 FOR 1.6 ML (1 cope)									M³	1.9
BETON C30/37 PER 1.6 ML/ CONCRETE C30/37 FOR 1.6 ML (7 cope)									M³	13.3

INVESTITORI / INVESTOR
"Autoriteti Rrugor Shqiptar"
Address: Rr. "Sami Frasheri", Nr 33, Tirane
Mob: 04 222 3600
E-mail: info@arrsh.gov.al

JV: "InfraKonsult" shpk & "HMK-Consulting" shpk

"Studim Projektim - Zgjerimi i segmentit rrugor dalje Elbasan-Prrenjas-Qafe Thane", (Faza II) / "Design Study of road segment exit Elbasan-Prrenjas-Qafe Thane" (Phase II)

Armimi i Tombinos Kuti 3.0x3.0 m / Reinforcement of Box Culvert 3.0x3.0 m - Km 9+120.25

FAZA - PROJEKT ZBATIM
PHASE - DETAIL DESIGN

SHKALLA / SCALE 1:50 1:50

Data: Mars 2023
Date: March 2023

VIZATIMI Nr: / PAGE No: E (4)

PROJEKTUES / DESIGN ENGINEERS:
Ing./Eng. Sokol METOJA
Ing./Eng. Redi STRUGA
Ing./Eng. Orgest MËRTIKA

SPERONE PER TOMBINON 3X3M
SH. 1:50

PRERJE GJATESORE NE AKS TE TOMBINOS
SHTRESAT MBI TOMBINO H=65cm

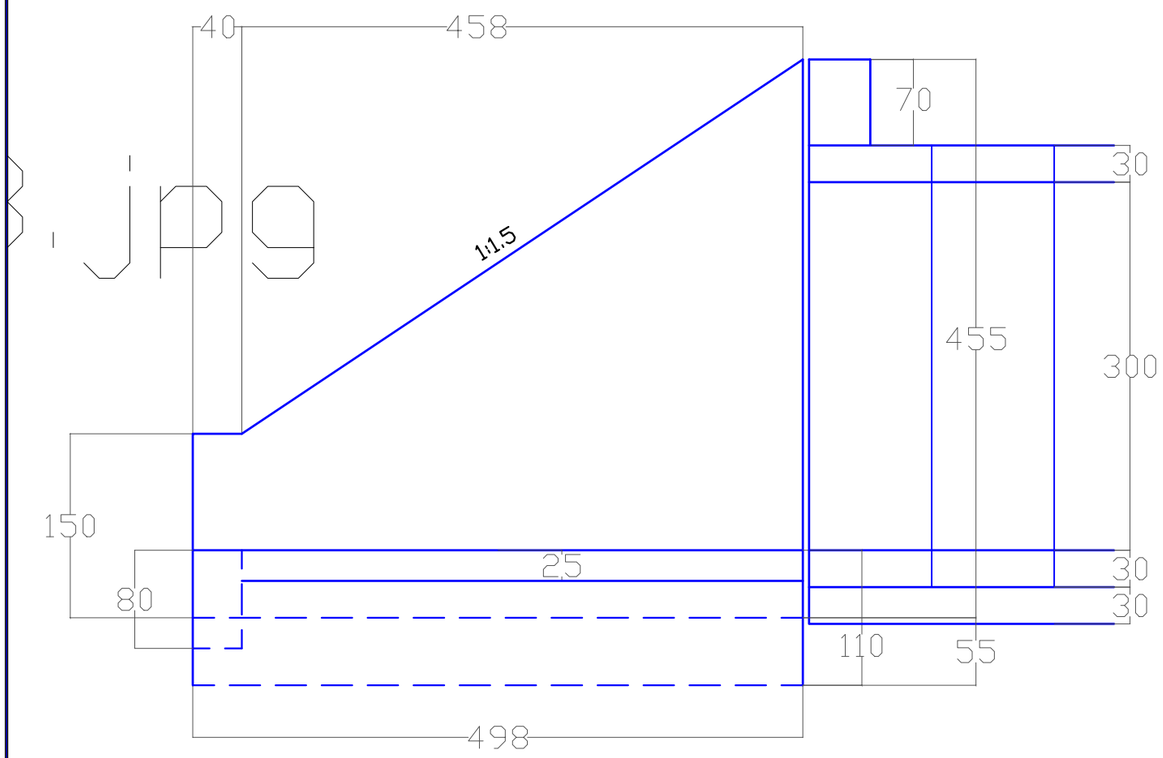

PAMJE NGA LART

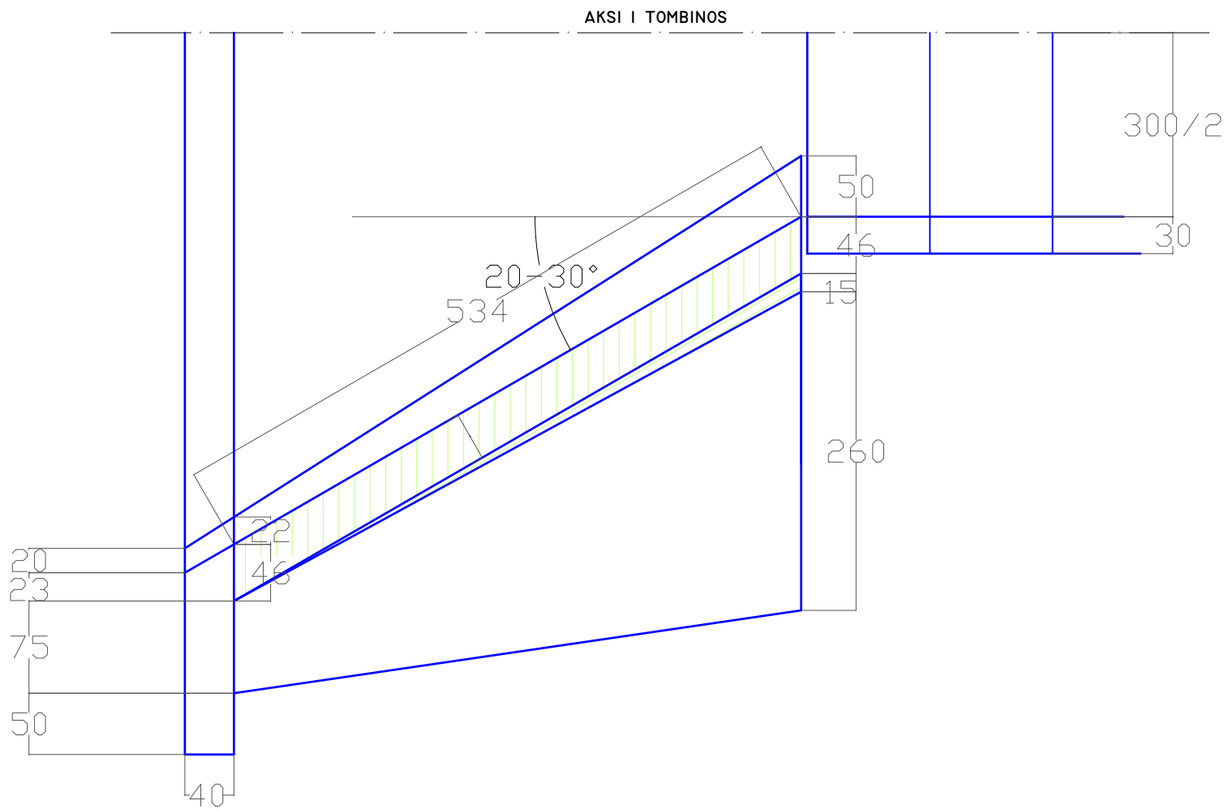

INVESTITORI / INVESTOR **"Autoriteti Rrugor Shqiptar"** **Address:** Rr. "Sami Frasheri", Nr 33, Tirane **Mob:** 04 222 3600 **E-mail:** info@arrsh.gov.al	**JV: "InfraKonsult" shpk & "HMK-Consulting" shpk**	***"Studim Projektim - Zgjerimi i segmentit rrugor dalje Elbasan-Prrenjas-Qafe Thane", (Faza II) / "Design Study of road segment exit Elbasan-Prrenjas-Qafe Thane" (Phase II)*** ***Speronet e Hyrjes dhe Daljes per Tombinon 3.0x3.0m / Inlet and Outlet Walls for Box Culvert 3.0x3.0 m***	FAZA - PROJEKT ZBATIM PHASE - DETAIL DESIGN *SHKALLA 1:50 / SCALE 1:50* *Data: Mars 2023 / Date: March 2023* *VIZATIMI Nr: / PAGE No:* E (5)

PROJEKTUES: / DESIGN ENGINEERS:
Ing./Eng. Sokol METOJA
Ing./Eng. Redi STRUGA
Ing./Eng. Orgest MËRTIKA

ARMIMI I SPERONAVE PER TOMBINON 3X3m

SH. 1:50

PRERJE A-A

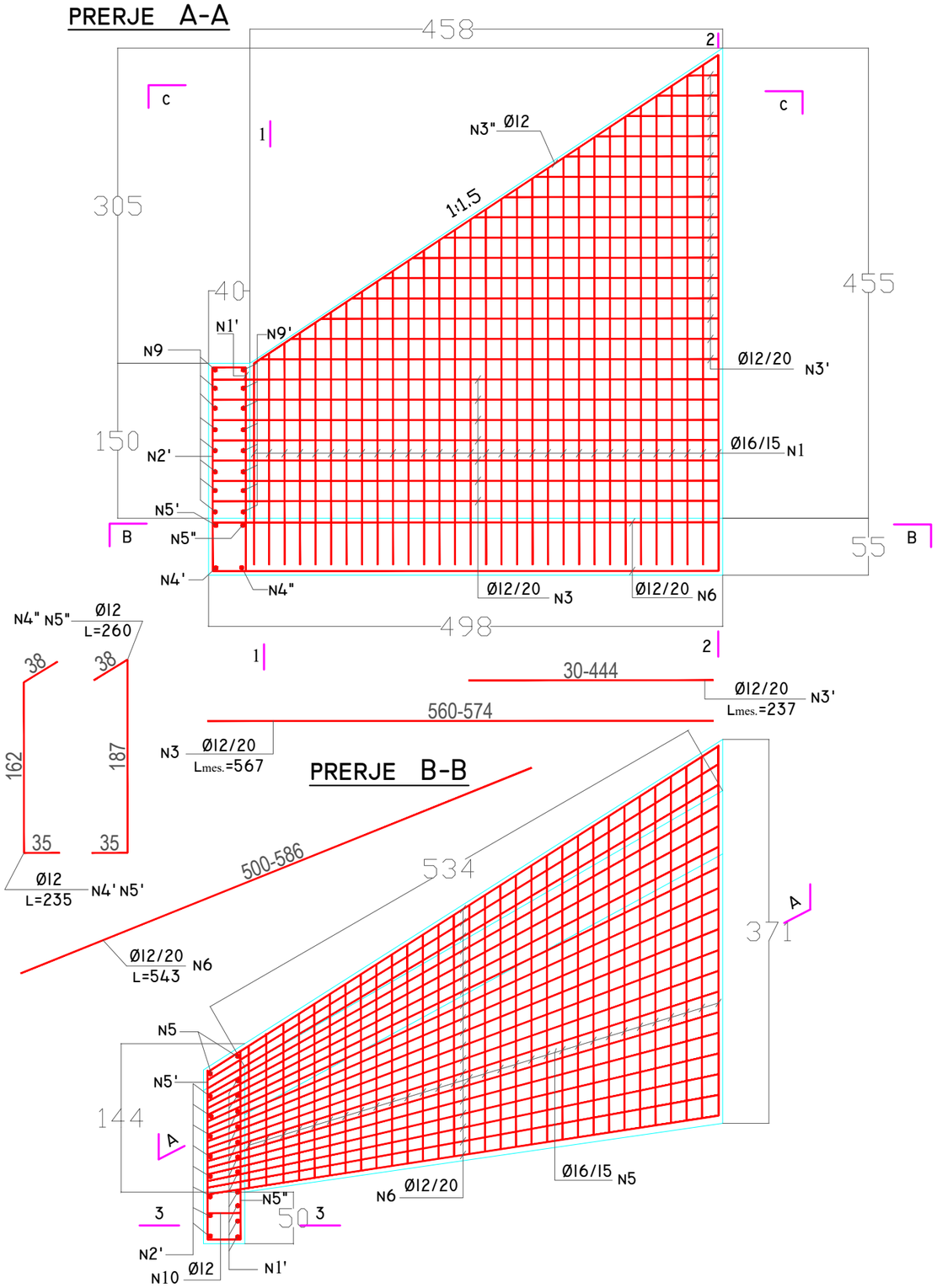

PRERJE 3-3

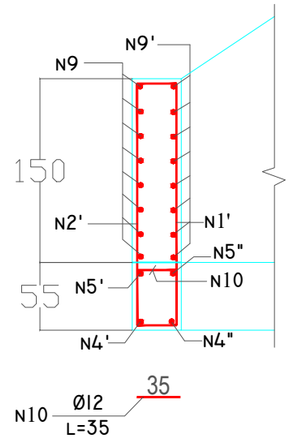

PRERJE 1-1

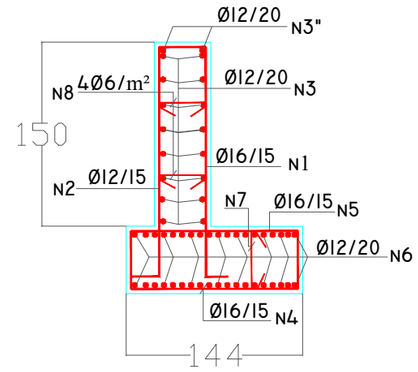

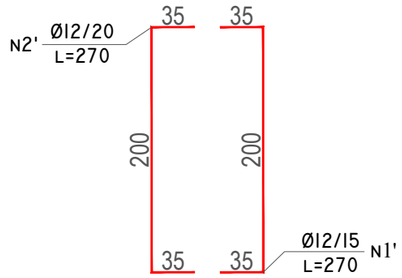

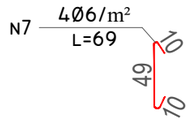

INVESTITORI / INVESTOR

"Autoriteti Rrugor Shqiptar"

Address: Rr. "Sami Frasheri", Nr 33, Tirane

Mob: 04 222 3600

E-mail: info@arrsh.gov.al

JV: "InfraKonsult" shpk & "HMK-Consulting" shpk

"Studim Projektim - Zgjerimi i segmentit rrugor dalje Elbasan-Prrenjas-Qafe Thane", (Faza II) / "Design Study of road segment exit Elbasan-Prrenjas-Qafe Thane" (Phase II)

Armimi i Speroneve te Hyrjes dhe Daljes per Tombinon 3.0x3.0m / Reinforcment of Inlet and Outlet Walls for Box Culvert 3.0x3.0 m

FAZA - PROJEKT ZBATIM
PHASE - DETAIL DESIGN

SHKALLA / SCALE	1:50 / 1:50	Data: Mars 2023 / Date: March 2023
VIZATIMI Nr: / PAGE No:	E (6)	

PROJEKTUES / DESIGN ENGINEERS:

Ing./Eng. Sokol METOJA
Ing./Eng. Redi STRUGA
Ing./Eng. Orgest MËRTIKA

ARMIMI I SPERONAVE PER TOMBINON 3X3m

SH. 1:50

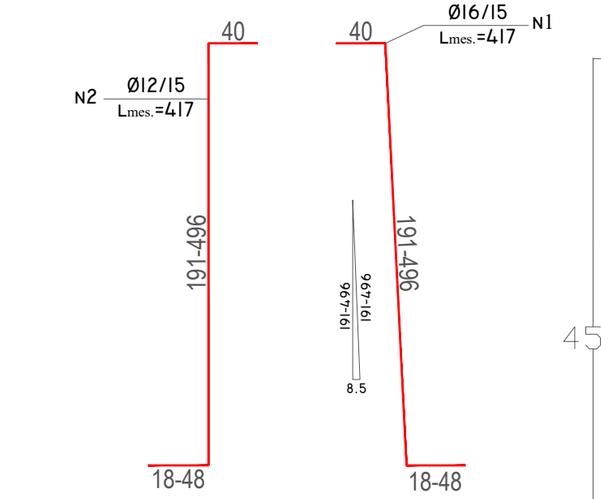

PRERJE 2-2

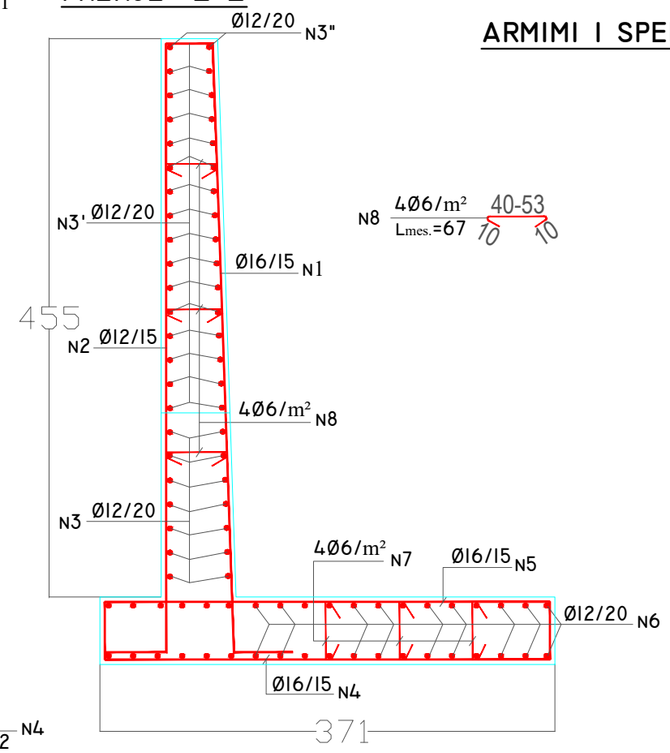

N8 4Ø6/m² 40-53
Lmes.=67 10 10

PRERJE C-C

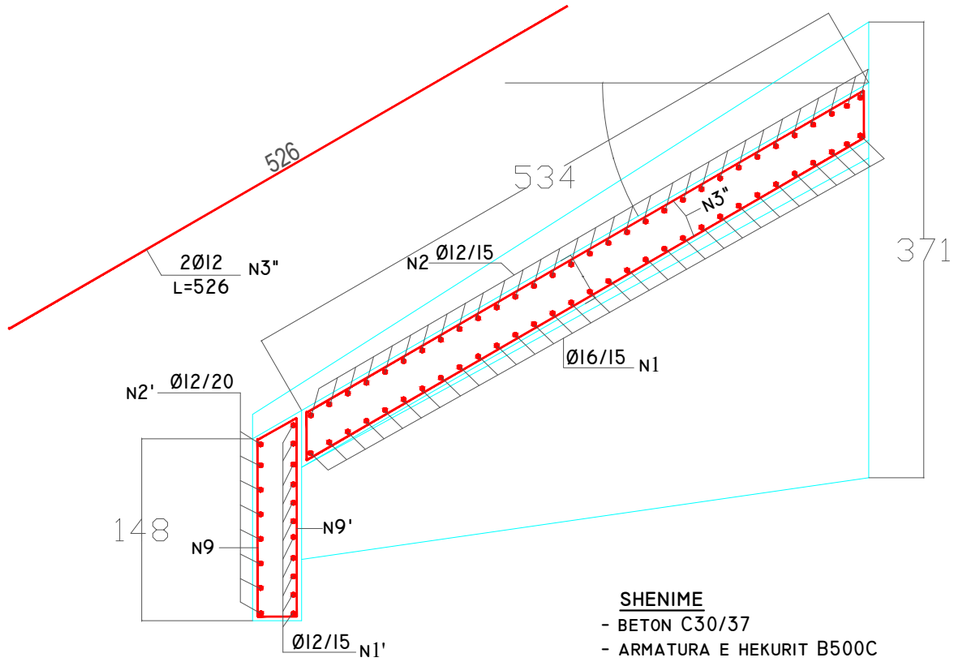

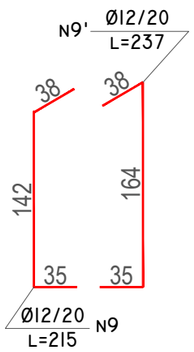

SHENIME

- BETON C30/37
- ARMATURA E HEKURIT B500C

TABELA E HEKURIT PER NJE SPERON

REINFORCEMENT TABLE FOR ONE INLET AND OUTLET WALL OF BOX CULVERT

NR. POZ.	Ø mm	L cm	SASIA cope	L m	PERMBLEDHJE E ARMATURES Ø mm	ΣL m	PESHA kg/ml	PESHA kg
1	16	417	31	129.27	6	69.95	0.222	15.53
1'	12	270	11	29.70	12	594.32	0.888	527.76
2	12	417	31	129.27	16	341.31	1.578	538.59
2'	12	270	8	21.60				
3	12	567	14	79.38				
3'	12	237	30	71.10				
3"	12	526	2	10.52				
4	16	342	31	106.02				
4'	12	235	1	2.35				
4"	12	260	1	2.60				
5	16	342	31	106.02				
5'	12	235	1	2.35				
5"	12	260	1	2.60				
6	12	543	38	206.34				
7	6	69	47	32.43				
8	6	67	56	37.52				
9	12	215	8	17.20				
9'	12	237	8	18.96				
10	12	35	1	0.35				
HEKURI / REINFORCEMENT							kg	1081.88
BETON C30/37 /CONCRETE C30/37							m³	13.94

INVESTITORI / INVESTOR
"Autoriteti Rrugor Shqiptar"
Address: Rr. "Sami Frasheri", Nr 33, Tirane
Mob: 04 222 3600
E-mail: info@arrsh.gov.al

JV: "InfraKonsult" shpk & "HMK-Consulting" shpk

"Studim Projektim - Zgjerimi i segmentit rrugor dalje Elbasan-Prrenjas-Qafe Thane", (Faza II) / "Design Study of road segment exit Elbasan-Prrenjas-Qafe Thane" (Phase II)

Armimi i Speroneve te Hyrjes dhe Daljes per Tombinon 3.0x3.0m / Reinforcment of Inlet and Outlet Walls for Box Culvert 3.0x3.0 m

FAZA - PROJEKT ZBATIM
PHASE - DETAIL DESIGN

SHKALLA 1:50
SCALE 1:50

Data: Mars 2023
Date: March 2023

VIZATIMI Nr:
PAGE No: E (7)

PROJEKTUES:
DESIGN ENGINEERS:
Ing./Eng. Sokol METOJA
Ing./Eng. Redi STRUGA
Ing./Eng. Orgest MËRTIKA

Armimi i Soletes Rakorduse/Approach slab reinforcement
sh./sc. 1:50

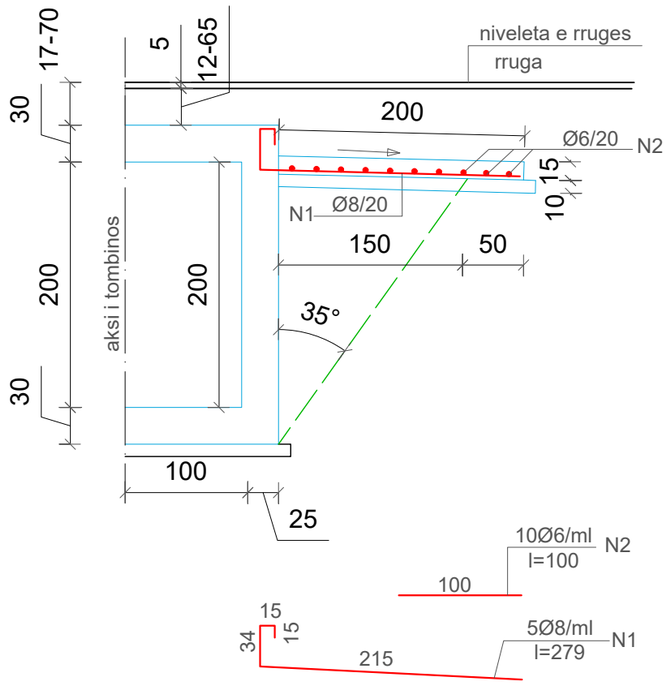

Shenime

1. B/Arme C 30/37
2. Celik periodik B500C

Soleta Rakorduese / Approach Slab						
Pozicioni / Position	Sasia (cope) / Pieces	Ø (mm)	L (cm)	Gjatesia Totale (m) / Total Length (m)	Pesha (njesi) / Weight (unit)	Pesha (kg) / Weight (kg)
1	5	8	279	13.95	0.394	6
2	10	6	100	10.00	0.222	2
Σ						7.72
Beton / Concrete m3/ml						0.30

Armimi i Parapetit/Top beam reinforcement
sh./sc. 1:50

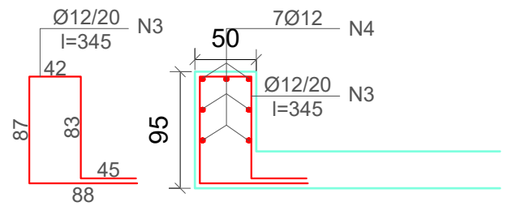

Parapeti / top Baem						
Pozicioni / Position	Sasia (cope) /	Ø (mm)	L (cm)	Gjatesia Totale (m) /	Pesha (njesi) /	Pesha (kg) /
3	5	12	345	17.25	0.887	15
4	7	12	100	7.00	0.887	6
Σ						21.52
Beton / Concrete m3/ml						0.50

INVESTITORI / INVESTOR
"Autoriteti Rrugor Shqiptar"
Address: Rr. "Sami Frasheri", Nr 33, Tirane
Mob: 04 222 3600
E-mail: info@arrsh.gov.al

InfraKonsult konsulence inxhinierike
HMK-CONSULTING SH.P.K Konsulence-Projektim-Mbikqyrje
JV: "InfraKonsult" shpk & "HMK-Consulting" shpk

"Studim Projektim - Zgjerimi i segmentit rrugor dalje Elbasan-Prrenjas-Qafe Thane", (Faza II) / "Design Study of road segment exit Elbasan-Prrenjas-Qafe Thane" (Phase II)

Armimi i Soletes Rakorduese
Approach Slab Reinforcement

FAZA - PROJEKT ZBATIM
PHASE - DETAIL DESIGN

SHKALLA / SCALE 1:50 1:50
Data: Mars 2023
Date: March 2023

VIZATIMI Nr: / PAGE No: E (8)

PROJEKTUES:
DESIGN ENGINEERS:
Ing./Eng. Sokol METOJA
Ing./Eng. Redi STRUGA
Ing./Eng. Orgest MËRTIKA

Tombino Box/Box Culvert 3 x 3 m
Planimetria/Planview Sh/Sc 1:200

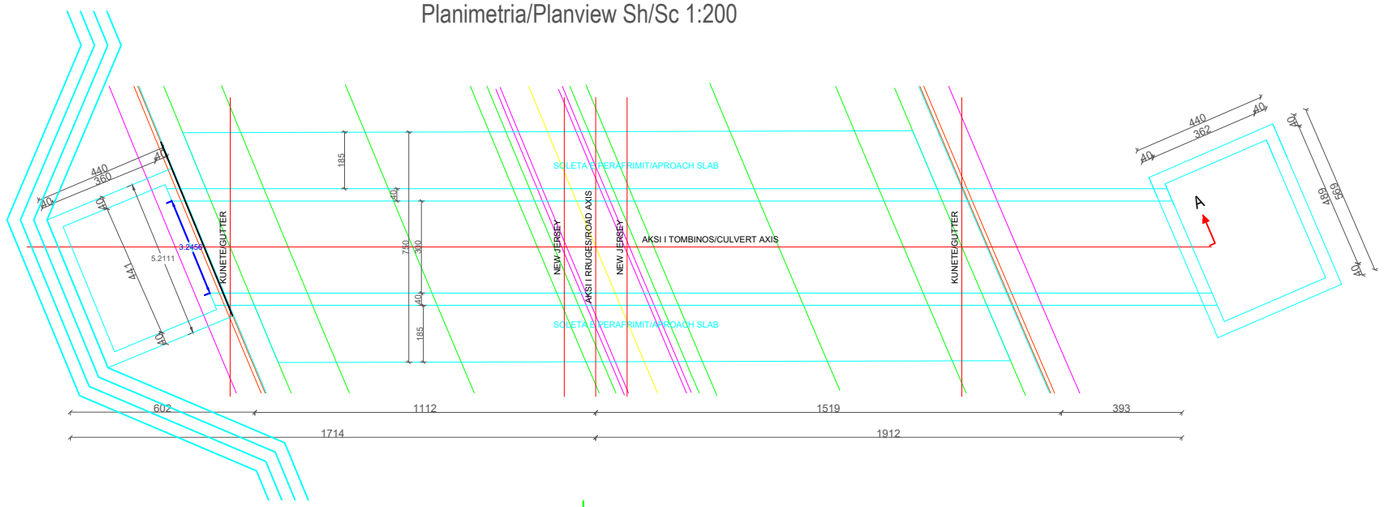

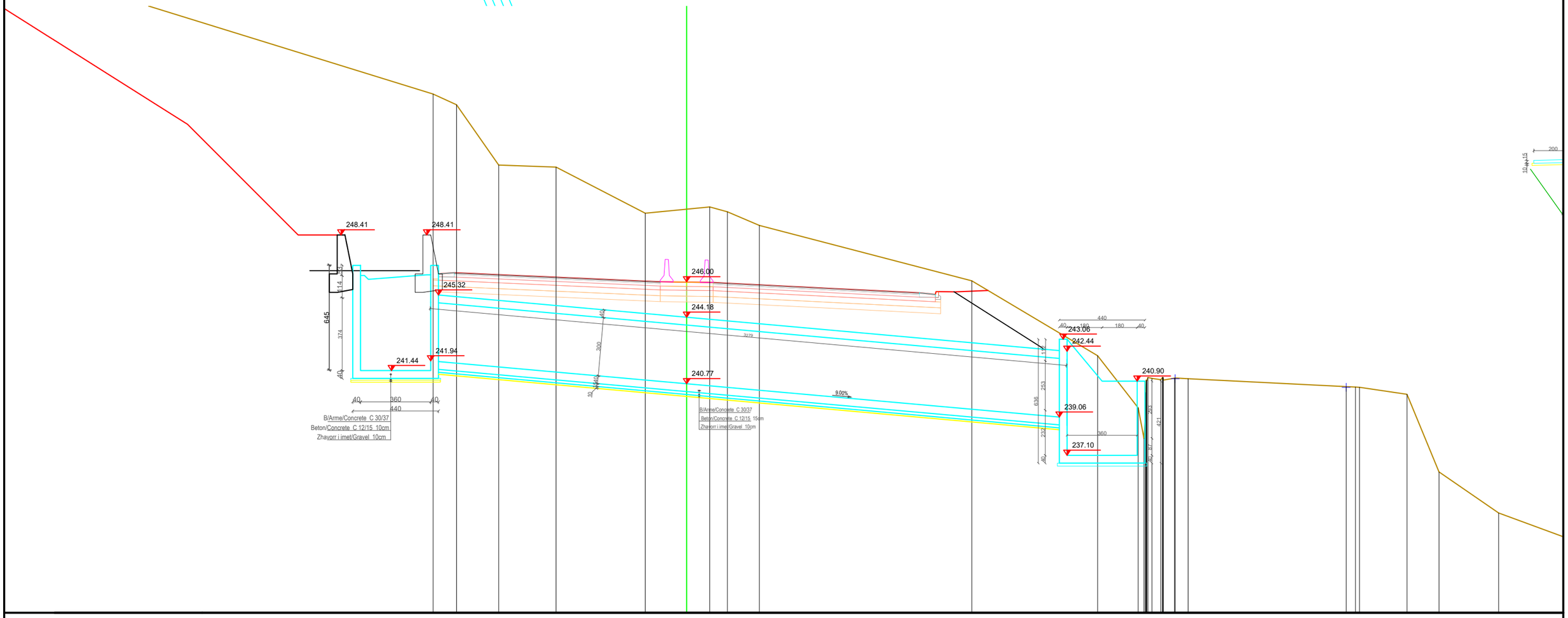

INVESTITORI / INVESTOR
"Autoriteti Rrugor Shqiptar"
Address: Rr. "Sami Frasheri", Nr 33, Tirane
Mob: 04 222 3600
E-mail: info@arrsh.gov.al

JV: "InfraKonsult" shpk & "HMK-Consulting" shpk

"Studim Projektim - Zgjerimi i segmentit rrugor dalje Elbasan-Prrenjas-Qafe Thane", (Faza II) / "Design Study of road segment exit Elbasan-Prrenjas-Qafe Thane" (Phase II)

Tombino Kuti 3m x 3m / Box Culvert 3m x 3m- Km 9+970.26

FAZA - PROJEKT ZBATIM
PHASE - DETAIL DESIGN

SHKALLA / SCALE	1:200	Data: Mars 2023 / Date: March 2023
VIZATIMI Nr: / PAGE No:	E (1)	

PROJEKTUES: / DESIGN ENGINEERS:
Ing./Eng. Sokol METOJA
Ing./Eng. Redi STRUGA
Ing./Eng. Orgest MËRTIKA

ARMIMI I TOMBINOS KUTI 3.0 m x 3.0 m Km.9+970.26 (PER 1ml) Sh 1:50

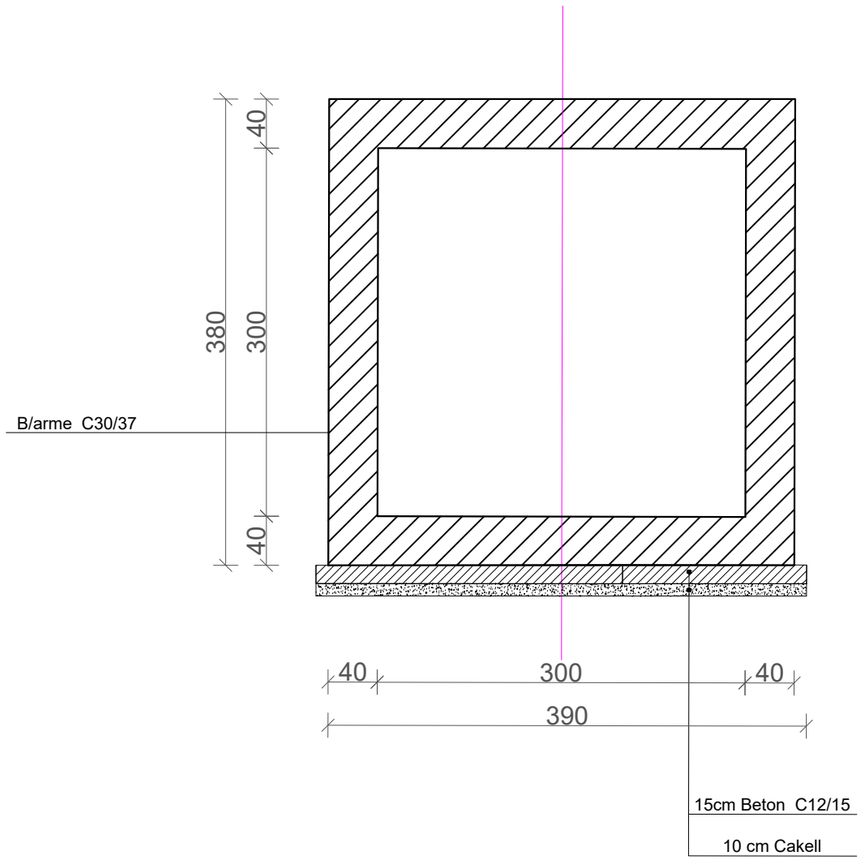

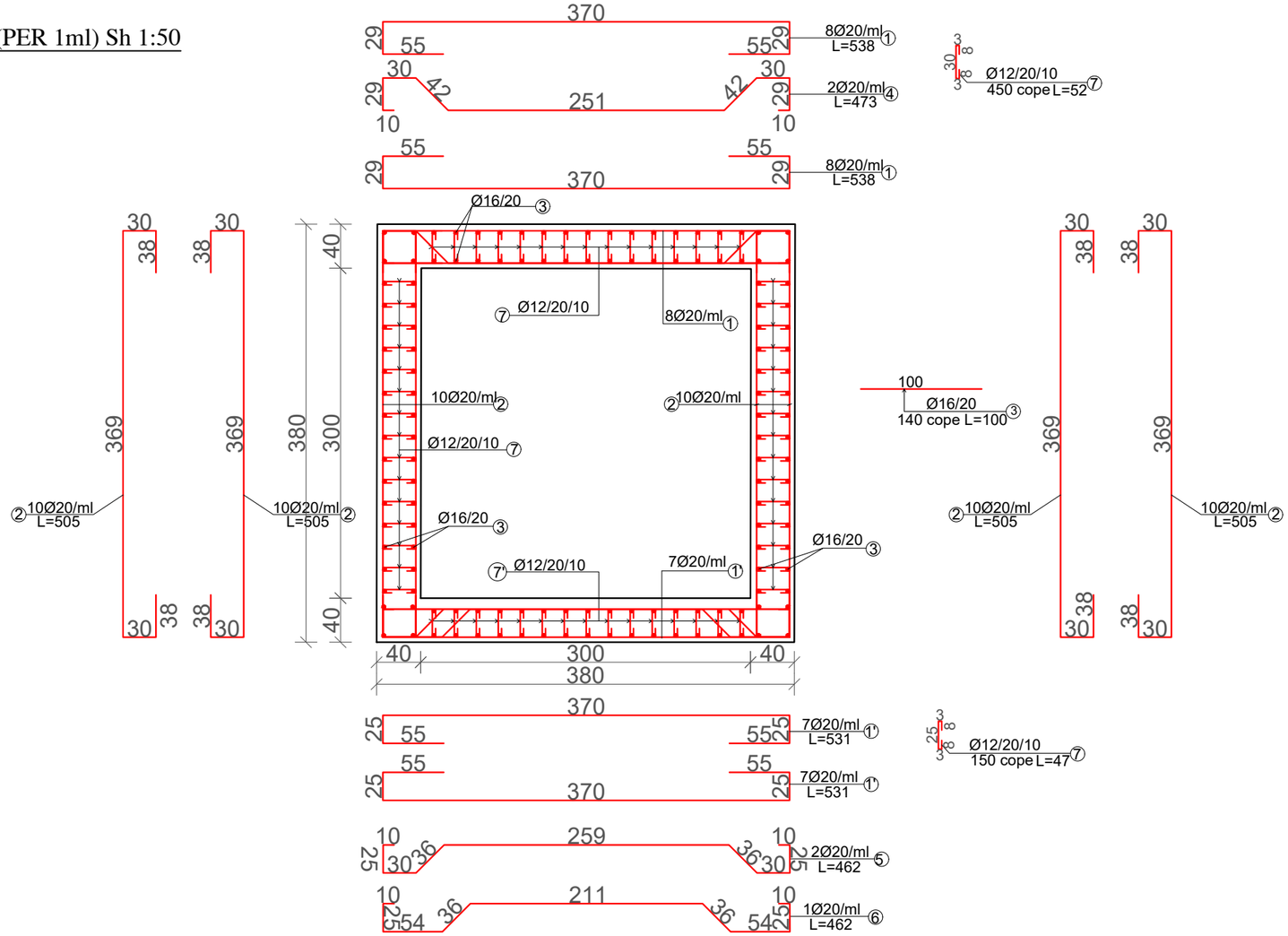

MATERIALET

TOMBINO KUTI : B/ARME C30/37

SHTRESE E VARFER : BETON C12/15

HEKURI: B500C, fyk=500MPa

SHTRESA MBROJTESE 5-10cm

ELEMENTI		SPECIFIKIMI I ARMATURES					SPECIFIKIMI I ELEMENTIT			TOTALI *(KG)*
Tipi	Cop	Poz	Φ	l (cm)	cope	L (m)	Φ	ΣLtot*(m)*	Pesha *(per kg)*	
Tombino 3 x 3 (Km.9+970.26)	1	1	20	538	16	86.08	***6***		*0.222*	
		1'	20	531	14	74.34	***8***		*0.395*	
		2	20	505	40	202	***10***		*0.617*	
		3	16	100	136	136	***12***	302	*0.888*	268
		4	20	473	2	9.46	***14***		*1.208*	
		5	20	462	2	9.24	***16***	136	*1.578*	215
		6	20	462	1	4.62	***18***		*1.998*	
		7	12	52	450	234	***20***	386	*2.466*	951
		7'	12	45	150	67.5	***22***		*2.984*	
							24		*3.551*	
							25		*3.853*	

HEKUR PER 1ML /REINFORCEMENT FOR 1ML	KG	**1434**
HEKUR PER 32.8 ML / REINFORCEMENT FOR 32.8 ML	KG	**47022.9264**
BETON C30/37 PER 32.8 ML/ CONCRETE C30/37 FOR 32.8 ML	M^3	**179**
BETON C12/15 PER 32.8 ML / CONCRETE C12/15 FOR 32.8 ML	M^3	**20**

INVESTITORI / INVESTOR

"Autoriteti Rrugor Shqiptar"

Address: Rr. "Sami Frasheri", Nr 33, Tirane

Mob: 04 222 3600

E-mail: info@arrsh.gov.al

JV: "InfraKonsult" shpk & "HMK-Consulting" shpk

"Studim Projektim - Zgjerimi i segmentit rrugor dalje Elbasan-Prrenjas-Qafe Thane", (Faza II) / "Design Study of road segment exit Elbasan-Prrenjas-Qafe Thane" (Phase II)

Armimi i Tombinos Kuti 3 x 3 m / Box Culvert 3 x 3 m Reinforcement Km 9+970.26

FAZA - PROJEKT ZBATIM
PHASE - DETAIL DESIGN

SHKALLA SCALE *1:50* — *Data: Mars 2023* *Date: March 2023*

VIZATIMI PAGE Nr: No: *E (2)*

PROJEKTUES: DESIGN ENGINEERS:

Ing./Eng. Sokol METOJA
Ing./Eng. Redi STRUGA
Ing./Eng. Orgest MËRTIKA

PRERJA/SECTION A-A Sh 1:50

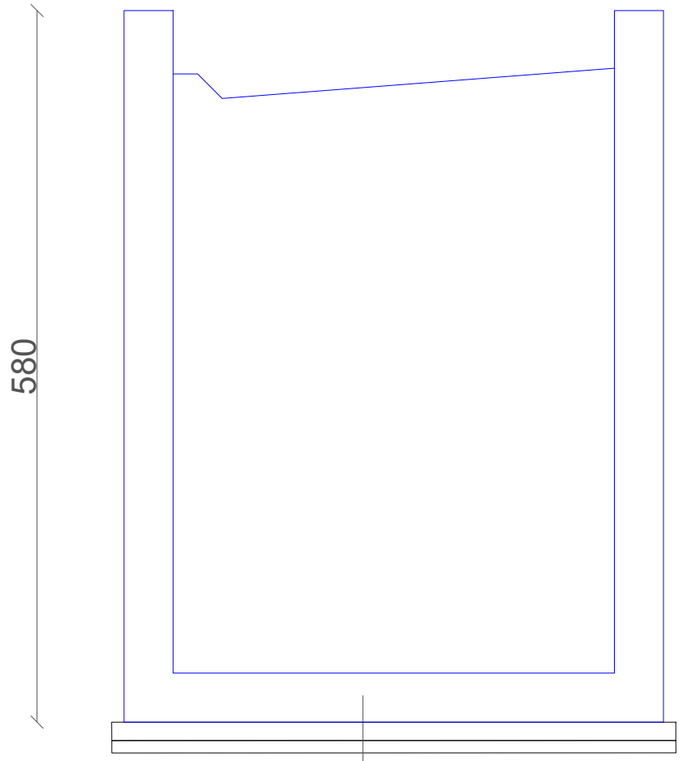

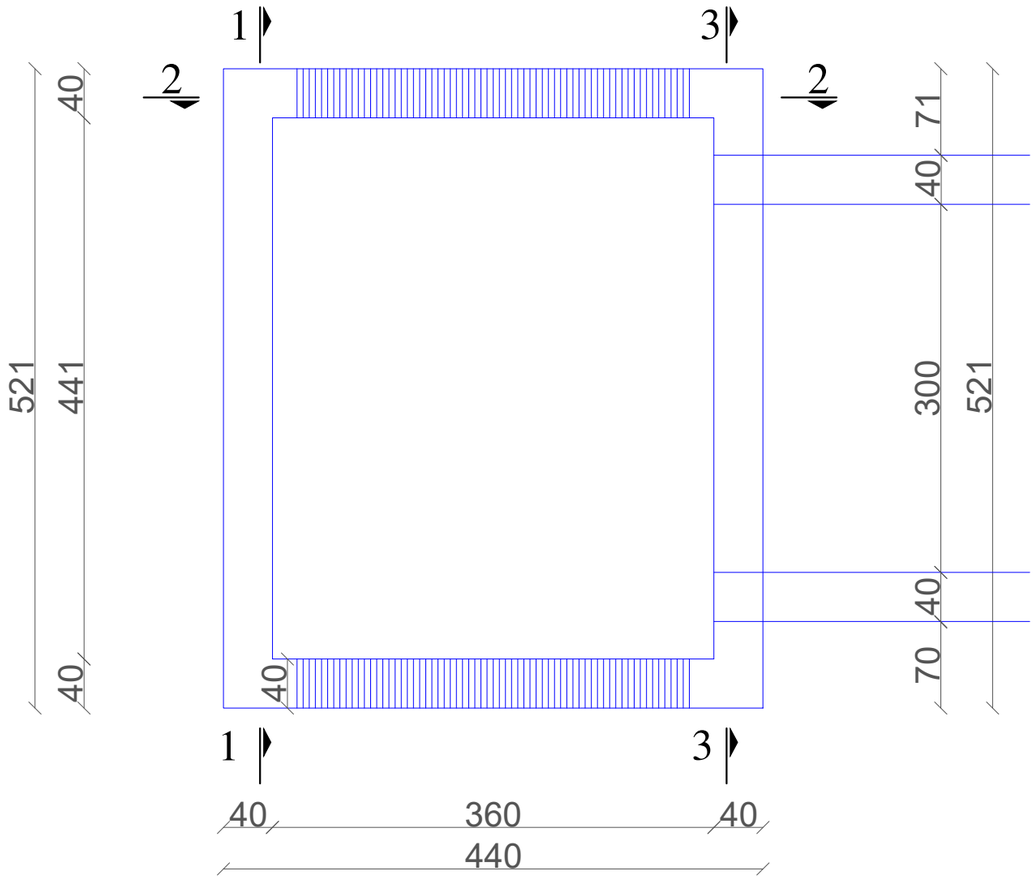

B/Arme/Concrete C 30/37

Beton/Concrete C 12/15 10cm

Zhavorr i imet/Gravel 10cm

INVESTITORI / INVESTOR

"Autoriteti Rrugor Shqiptar"

Address: Rr. "Sami Frasheri", Nr 33, Tirane

Mob: 04 222 3600
E-mail: info@arrsh.gov.al

JV: "InfraKonsult" shpk & "HMK-Consulting" shpk

"Studim Projektim - Zgjerimi i segmentit rrugor dalje Elbasan-Prrenjas-Qafe Thane", (Faza II) / "Design Study of road segment exit Elbasan-Prrenjas-Qafe Thane" (Phase II)

Prerja e Pusetes 3.6x4.4m / Manhole Section 3.6x4.4m Km 9+970.26

FAZA - PROJEKT ZBATIM
PHASE - DETAIL DESIGN

SHKALLA / SCALE	*1:50*	*Data: Mars 2023 / Date: March 2023*
VIZATIMI Nr: / PAGE No:	*E (3)*	

PROJEKTUES:
DESIGN ENGINEERS:

Ing./Eng. Sokol METOJA
Ing./Eng. Redi STRUGA
Ing./Eng. Orgest MËRTIKA

PRERJE/SECTION 2-2
Sh/Sc 1:100

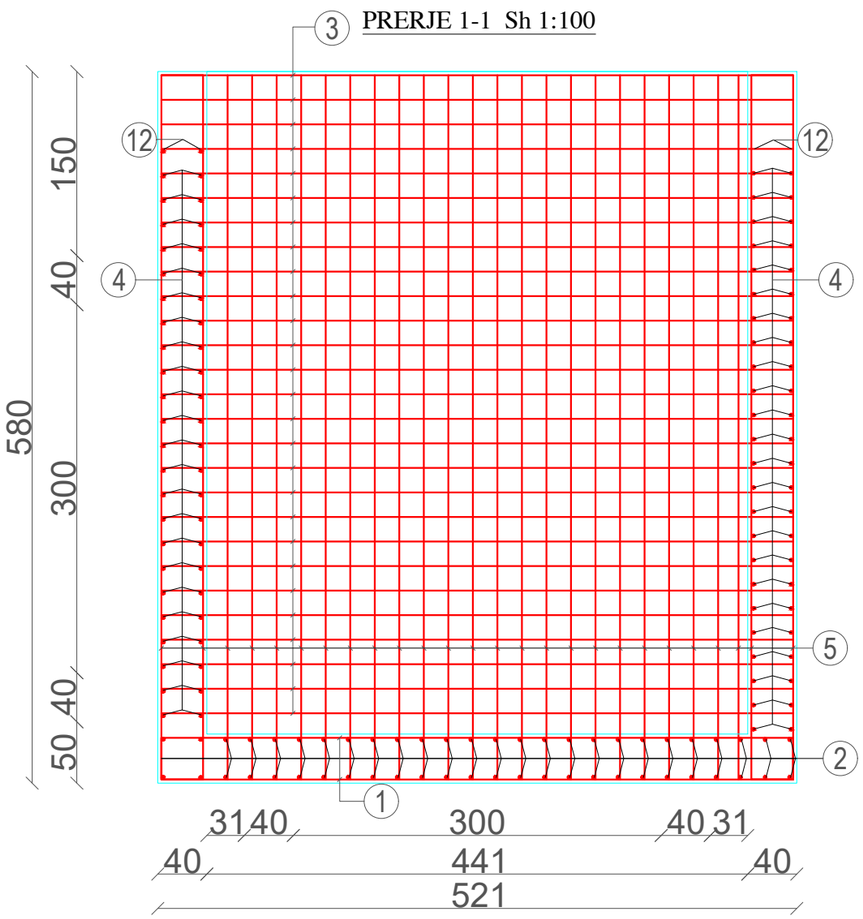

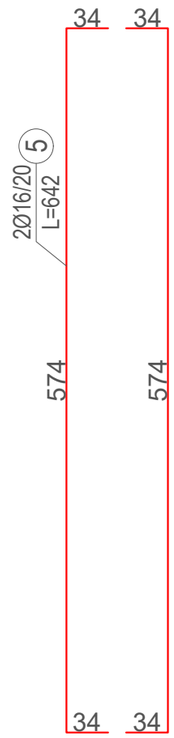

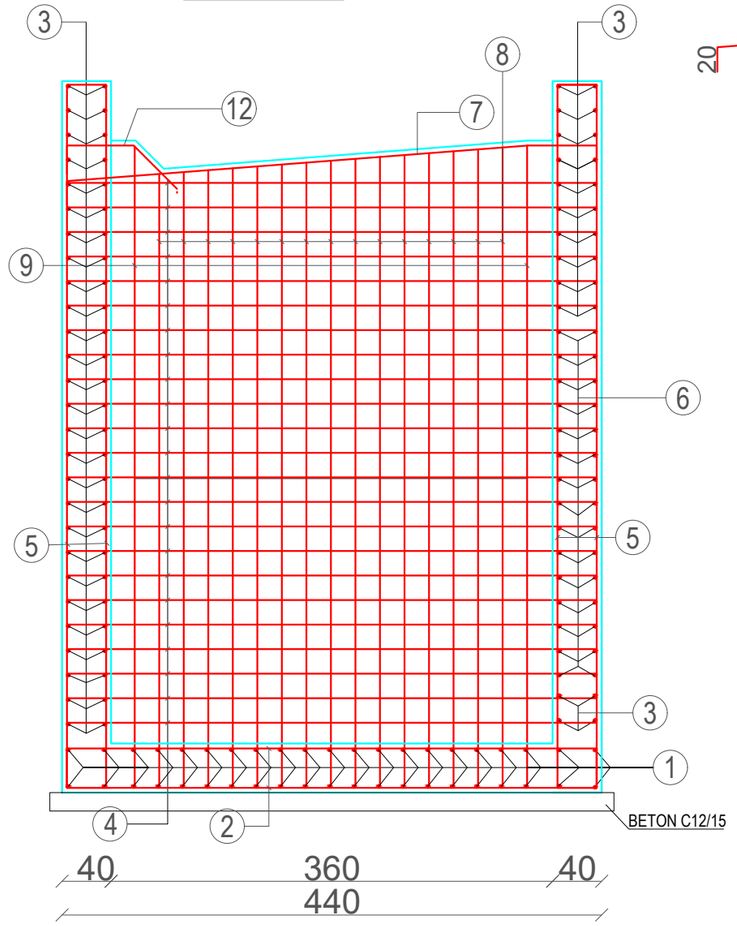

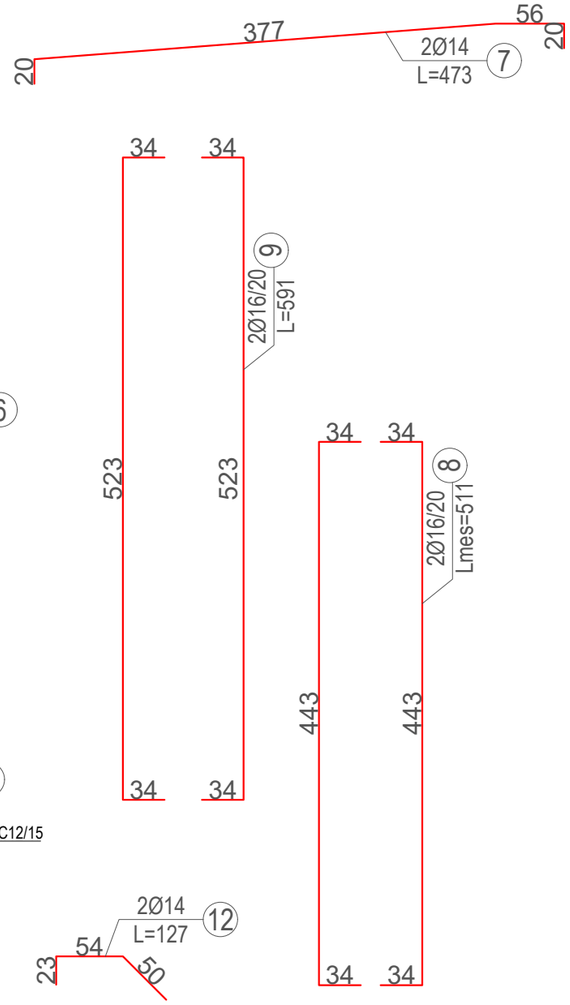

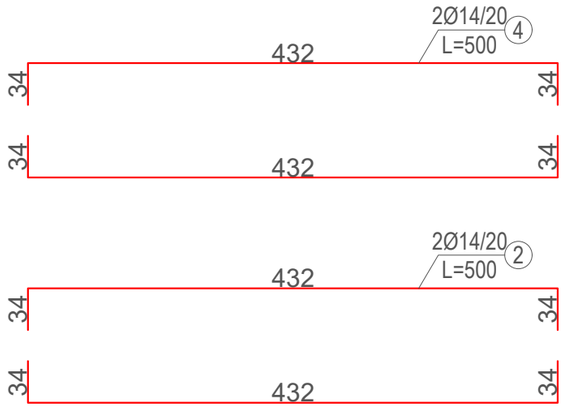

INVESTITORI / INVESTOR
"Autoriteti Rrugor Shqiptar"
Address: Rr. "Sami Frasheri", Nr 33, Tirane
Mob: 04 222 3600
E-mail: info@arrsh.gov.al

JV: "InfraKonsult" shpk & "HMK-Consulting" shpk

"Studim Projektim - Zgjerimi i segmentit rrugor dalje Elbasan-Prrenjas-Qafe Thane", (Faza II) / "Design Study of road segment exit Elbasan-Prrenjas-Qafe Thane" (Phase II)

Armimi i Pusetes 3.6x4.4m / Manhole Reinforcement 3.6x4.4m Km 9+970.26

FAZA - PROJEKT ZBATIM
PHASE - DETAIL DESIGN

SHKALLA / SCALE	1:50	Data: Mars 2023 / Date: March 2023
VIZATIMI / PAGE	Nr: / No: E (4)	

PROJEKTUES: / DESIGN ENGINEERS:
Ing./Eng. Sokol METOJA
Ing./Eng. Redi STRUGA
Ing./Eng. Orgest MËRTIKA

PRERJE 3-3 Sh 1:100

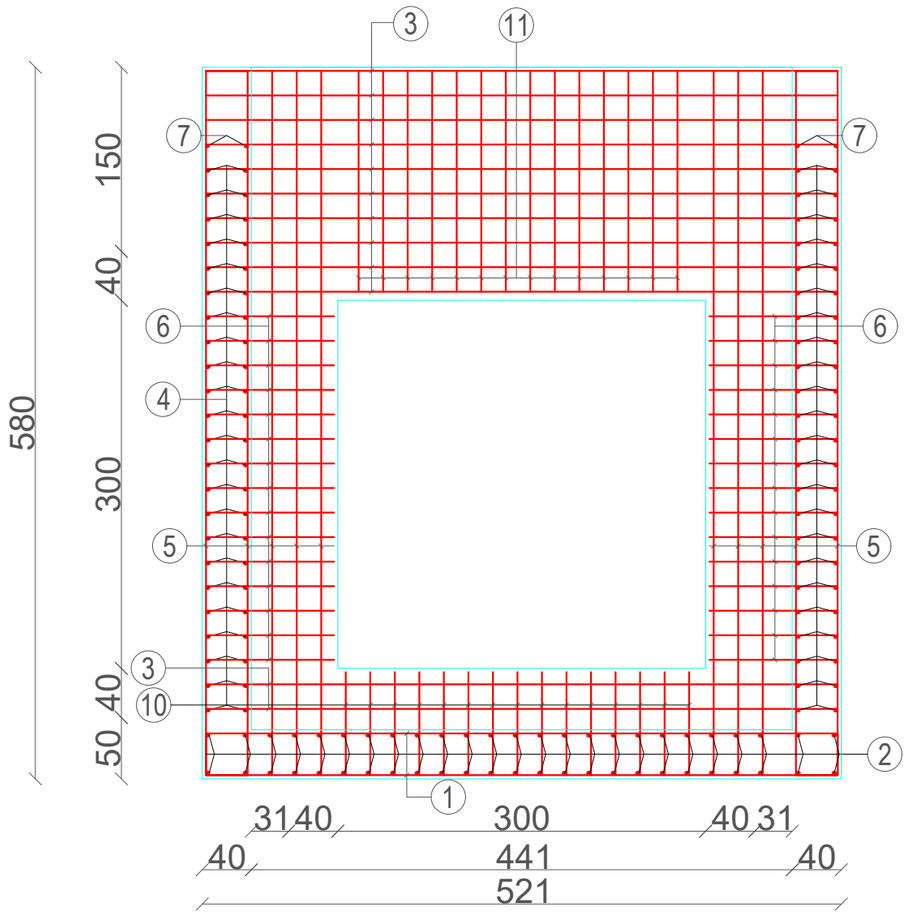

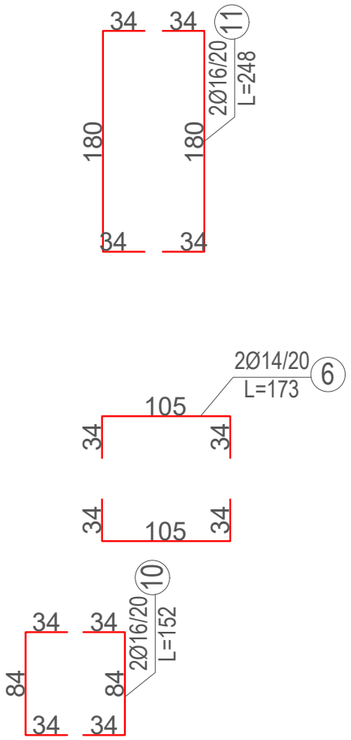

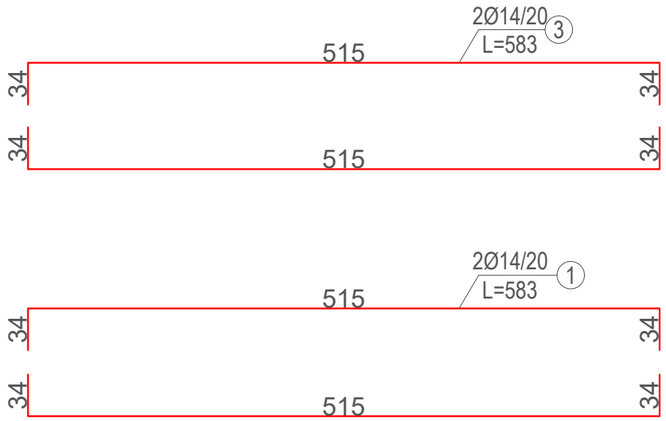

ELEMENTI		SPECIFIKIMI I ARMATURES					SPECIFIKIMI I ELEMENTIT			TOTALI (KG)
Tipi	Cop	Poz	Φ	l (cm)	cope	L (m)	Φ	ΣLtot(m)	Pesha (per kg)	
Armimi i pusetes Km 9+970.26	1	1	14	583	42	244.86	6		0.222	
		2	14	500	52	260	8		0.395	
		3	14	583	78	454.74	10		0.617	
		4	14	500	96	480	12		0.888	
		5	16	642	80	513.6	14	1567	1.208	1894
		6	14	173	60	103.8	16	983	1.578	1551
		7	14	473	4	18.92	18		1.998	
		8	16	511	60	306.6	20		2.466	
		9	16	591	8	47.28	22		2.984	
		10	16	152	30	45.6	24		3.551	
		11	16	248	28	69.44	25		3.853	
		12	14	127	4	5.08				

F V hekur betoni periodik Ø 6 - 10 mm	kg	
F V hekur betoni periodik Ø > 10 mm	kg	3445
BETON C30/37	m³	45.3
Shtresa C12/15	m³	3.6
Total hekur per 1 pusete	kg	3444.8

PRERJE 3-3 Sh 1:100

INVESTITORI / INVESTOR
"Autoriteti Rrugor Shqiptar"
Address: Rr. "Sami Frasheri", Nr 33, Tirane
Mob: 04 222 3600
E-mail: info@arrsh.gov.al

JV: "InfraKonsult" shpk & "HMK-Consulting" shpk

"Studim Projektim - Zgjerimi i segmentit rrugor dalje Elbasan-Prrenjas-Qafe Thane", (Faza II) / "Design Study of road segment exit Elbasan-Prrenjas-Qafe Thane" (Phase II)

Armimi i Pusetes 3.6x4.4m / Manhole Reinforcement 3.6x4.4m Km 9+970.26

FAZA - PROJEKT ZBATIM
PHASE - DETAIL DESIGN

SHKALLA / SCALE 1:50 — Data: Mars 2023 / Date: March 2023

VIZATIMI Nr: / PAGE No: E (5)

PROJEKTUES: / DESIGN ENGINEERS:
Ing./Eng. Sokol METOJA
Ing./Eng. Redi STRUGA
Ing./Eng. Orgest MËRTIKA

PRERJ/SECTION 1-1
Sh/Sc 1:100

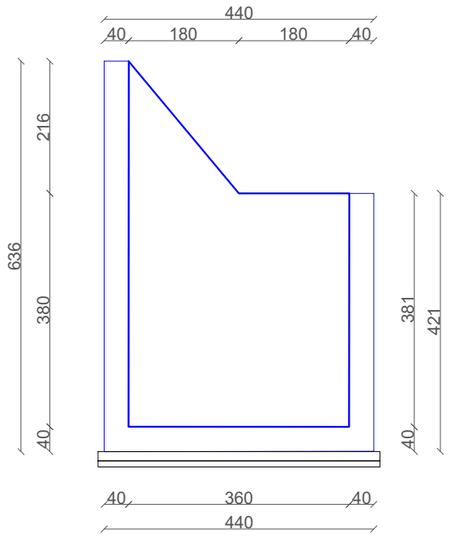

PRERJ/SECTION 3-3
Sh/Sc 1:100

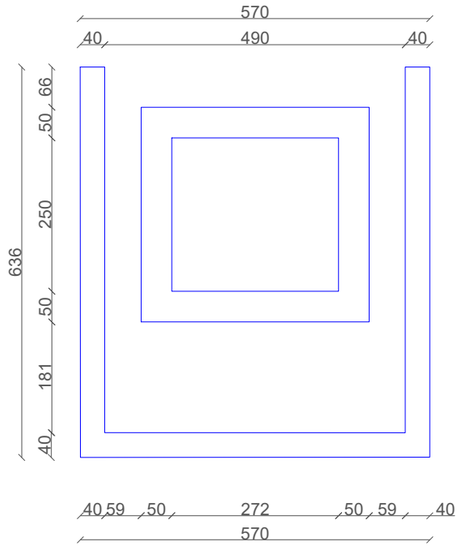

PRERJ/SECTION 2-2
Sh/Sc 1:100

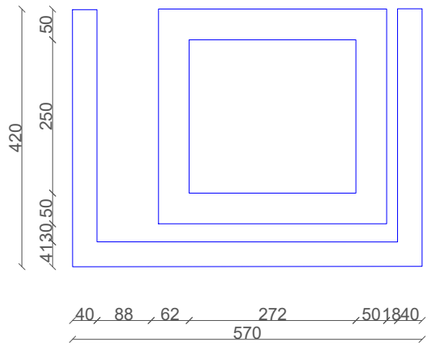

PRERJA/SECTION A-A
Sh/Sc 1:100

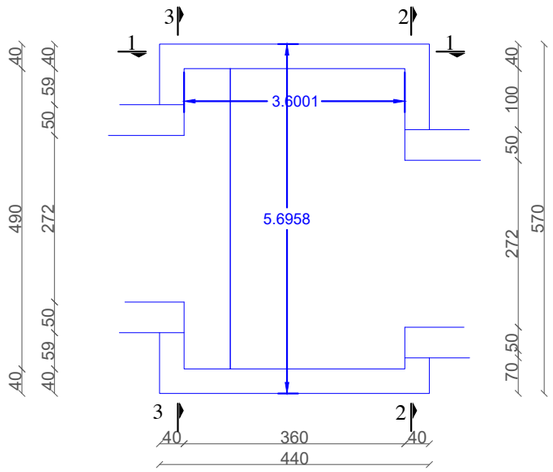

INVESTITORI / INVESTOR
"Autoriteti Rrugor Shqiptar"

Address: Rr. "Sami Frasheri", Nr 33, Tirane

Mob: 04 222 3600
E-mail: info@arrsh.gov.al

JV: "InfraKonsult" shpk & "HMK-Consulting" shpk

"Studim Projektim - Zgjerimi i segmentit rrugor dalje Elbasan-Prrenjas-Qafe Thane", (Faza II) / "Design Study of road segment exit Elbasan-Prrenjas-Qafe Thane" (Phase II)

Armimi i Pusetes 3.6x4.9m / Manhole Reinforcement 3.6x4.9m Km 9+970.26

FAZA - PROJEKT ZBATIM
PHASE - DETAIL DESIGN

SHKALLA / SCALE	1:50	Data: Mars 2023 / Date: March 2023
VIZATIMI Nr: / PAGE No:	E (6)	

PROJEKTUES:
DESIGN ENGINEERS:
Ing./Eng. Sokol METOJA
Ing./Eng. Redi STRUGA
Ing./Eng. Orgest MËRTIKA

PRERJE/SECTION 1-1
Sh/Sc 1:50

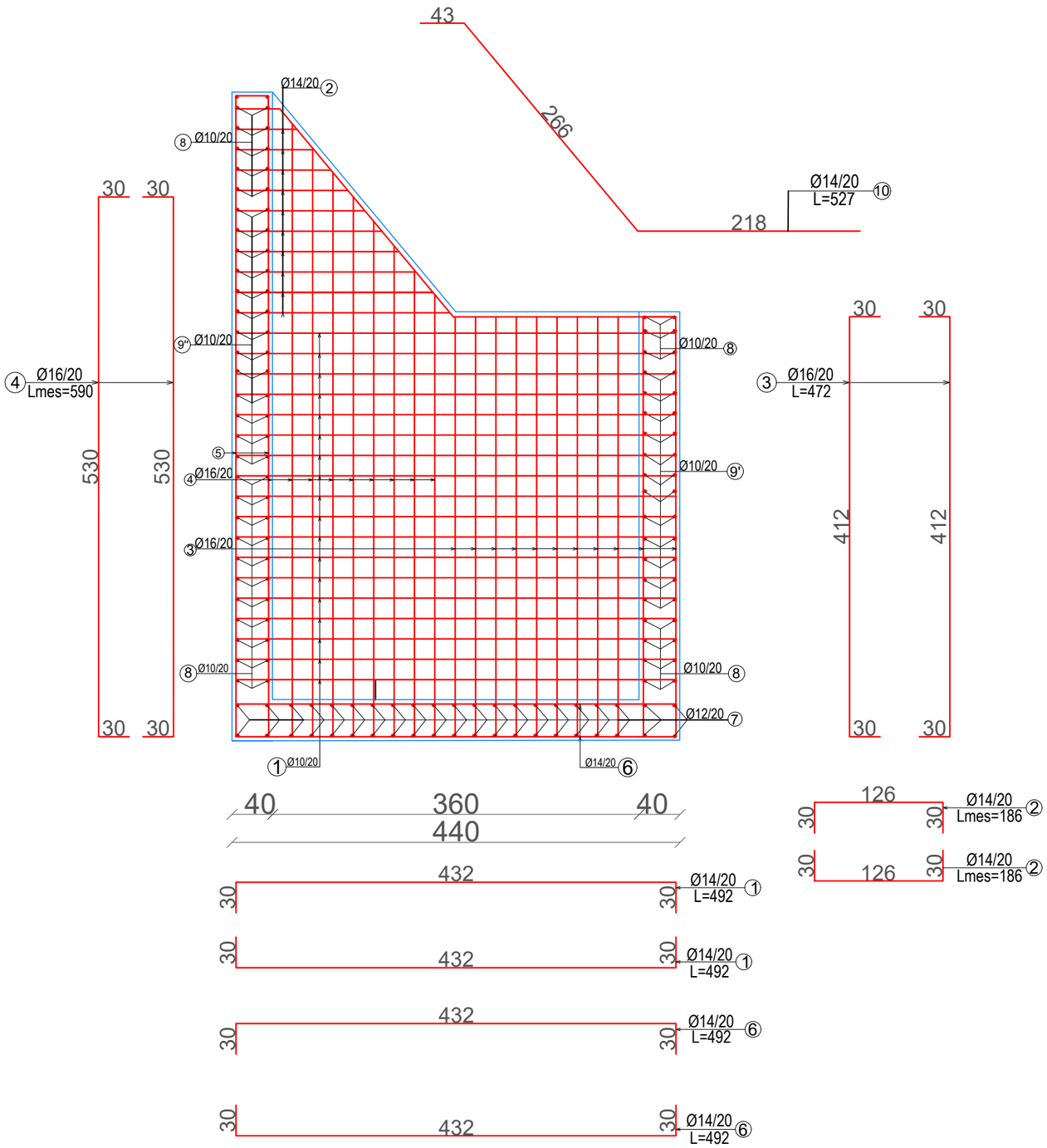

PRERJE/SECTION 2-2
Sh/Sc 1:100

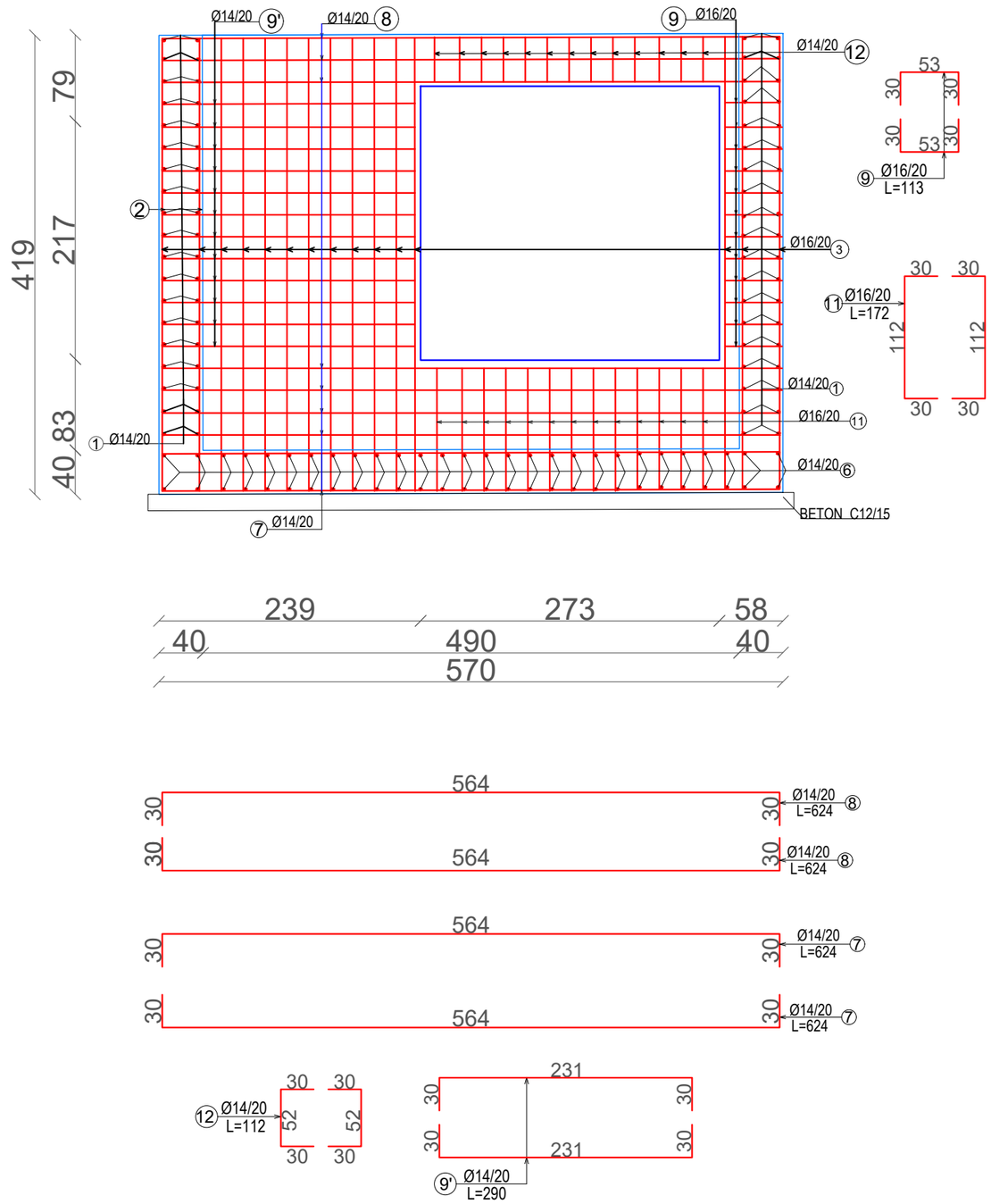

INVESTITORI / INVESTOR
"Autoriteti Rrugor Shqiptar"
Address: Rr. "Sami Frasheri", Nr 33, Tirane
Mob: 04 222 3600
E-mail: info@arrsh.gov.al

JV: "InfraKonsult" shpk & "HMK-Consulting" shpk

"Studim Projektim - Zgjerimi i segmentit rrugor dalje Elbasan-Prrenjas-Qafe Thane", (Faza II) / "Design Study of road segment exit Elbasan-Prrenjas-Qafe Thane" (Phase II)

Armimi i Pusetes 3.6x4.9m / Manhole Reinforcement 3.6x4.9m Km 9+970.26

FAZA - PROJEKT ZBATIM
PHASE - DETAIL DESIGN

SHKALLA / SCALE 1:50	Data: Mars 2023 / Date: March 2023
VIZATIMI Nr: / PAGE No: E (7)	

PROJEKTUES: / DESIGN ENGINEERS:
Ing./Eng. Sokol METOJA
Ing./Eng. Redi STRUGA
Ing./Eng. Orgest MËRTIKA

PRERJE/SECTION 3-3
Sh/Sc 1:100

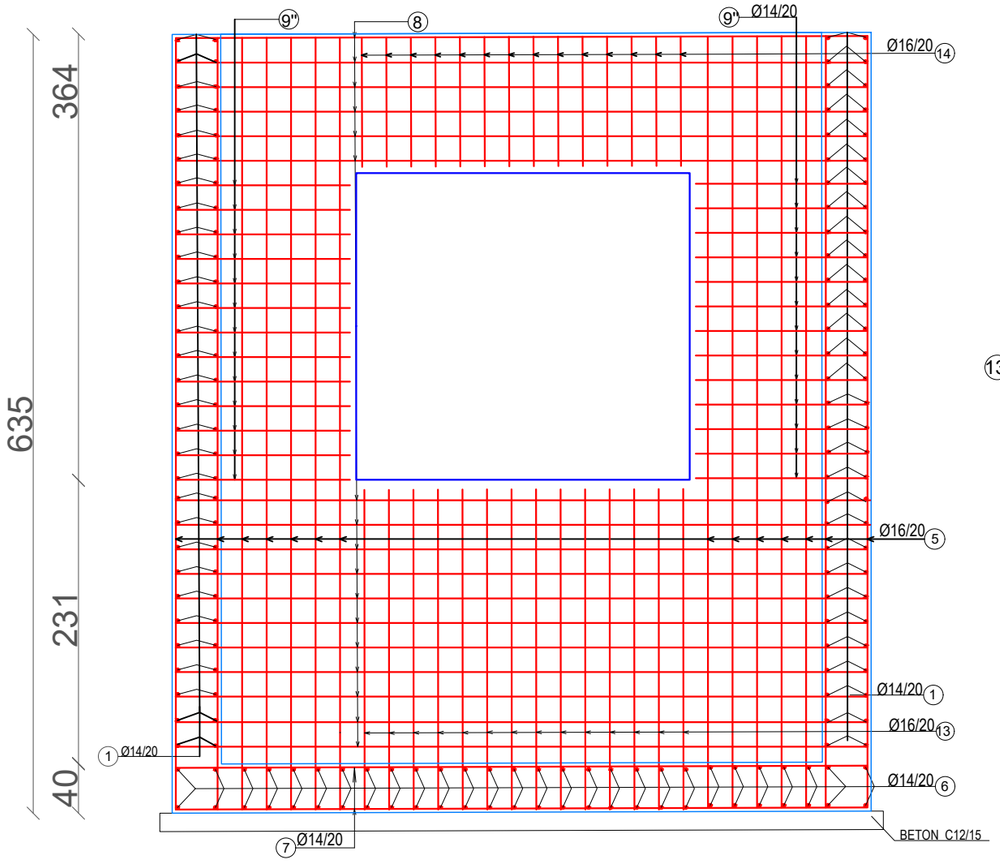

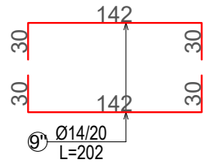

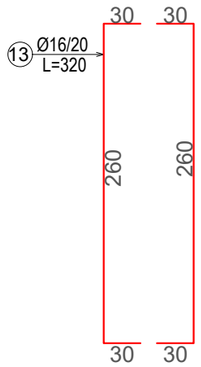

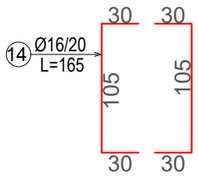

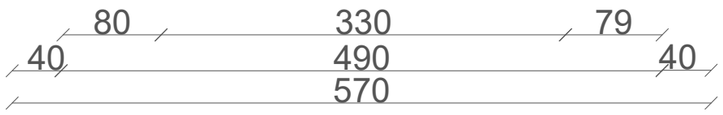

ELEMENTI		SPECIFIKIMI I ARMATURES					SPECIFIKIMI I ELEMENTIT			TOTALI *(KG)*
Tipi	Cop	Poz	Φ	l (cm)	cope	L (m)	Φ	ΣLtot*(m)*	Pesha *(per kg)*	
Armimi i Pusetes	1	1	14	492	72	354.24	***6***		*0.222*	
		2	14	186	44	81.84	***8***		*0.395*	
		3	16	472	46	217.12	***10***		*0.617*	
		4	16	590	32	188.8	***12***		*0.888*	
		5	16	689	28	192.92	***14***	1500	*1.208*	1905
		6	14	492	56	275.52	***16***	806	*1.578*	1338
		7	14	624	42	262.08	***18***		*1.998*	
		8	14	624	48	299.52	***20***		*2.466*	
		9	16	113	24	27.12	***22***		*2.984*	
		9'	14	290	24	69.6	***24***		*3.551*	
		9''	14	202	52	105.04	***25***		*3.853*	
		10	14	527	4	21.08				
		11	16	172	26	44.72				
		12	14	120	26	31.2				
		13	16	320	28	89.6				
		14	16	165	28	46.2				
										3243

BETON PUSETE C30/37	**M3**	42.67
BETON PUSETE C12/15	**M3**	4.22

INVESTITORI / INVESTOR
"Autoriteti Rrugor Shqiptar"
Address: Rr. "Sami Frasheri", Nr 33, Tirane
Mob: 04 222 3600
E-mail: info@arrsh.gov.al

JV: "InfraKonsult" shpk & "HMK-Consulting" shpk

"Studim Projektim - Zgjerimi i segmentit rrugor dalje Elbasan-Prrenjas-Qafe Thane", (Faza II) / "Design Study of road segment exit Elbasan-Prrenjas-Qafe Thane" (Phase II)

Armimi i Pusetes 3.6x4.9m / Manhole Reinforcement 3.6x4.9m Km 9+970.26

FAZA - PROJEKT ZBATIM
PHASE - DETAIL DESIGN

SHKALLA / SCALE 1:50
Data: Mars 2023 / Date: March 2023
VIZATIMI Nr: / PAGE No: E (8)

PROJEKTUES: / DESIGN ENGINEERS:
Ing./Eng. Sokol METOJA
Ing./Eng. Redi STRUGA
Ing./Eng. Orgest MËRTIKA

Armimi i Soletes Rakorduse/Approach slab reinforcement
sh./sc. 1:50

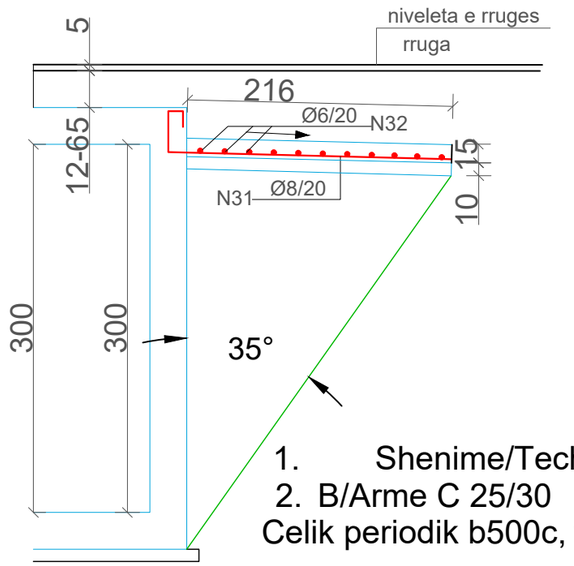

1. Shenime/Technical notes
2. B/Arme C 25/30
Celik periodik b500c, fyk= 500Mpa

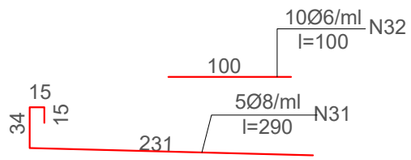

Soleta Rakorduese / Approach Slab						
Pozicioni / Position	Sasia (cope) / Pieces	∅ (mm)	L (cm)	Gjatesia Totale (m) / Total Length (m)	Pesha (njesi) / Weight (unit)	Pesha (kg) / Weight (kg)
31	5	8	290	14.50	0.394	6
32	11	6	100	11.00	0.222	2
Σ						8.16
Beton / Concrete m3/ml						0.54

INVESTITORI / INVESTOR
"Autoriteti Rrugor Shqiptar"
Address: Rr. "Sami Frasheri", Nr 33, Tirane
Mob: 04 222 3600
E-mail: info@arrsh.gov.al

JV: "InfraKonsult" shpk & "HMK-Consulting" shpk

"Studim Projektim - Zgjerimi i segmentit rrugor dalje Elbasan-Prrenjas-Qafe Thane", (Faza II) / "Design Study of road segment exit Elbasan-Prrenjas-Qafe Thane" (Phase II)

Armimi i Soletes Rakorduese/ Approach Slab Reinforcement Km 9+970.26

FAZA - PROJEKT ZBATIM
PHASE - DETAIL DESIGN

SHKALLA / SCALE 1:50 — *Data: Mars 2023 / Date: March 2023*

VIZATIMI Nr: / PAGE No: E (9)

PROJEKTUES: / DESIGN ENGINEERS:
Ing./Eng. Sokol METOJA
Ing./Eng. Redi STRUGA
Ing./Eng. Orgest MËRTIKA

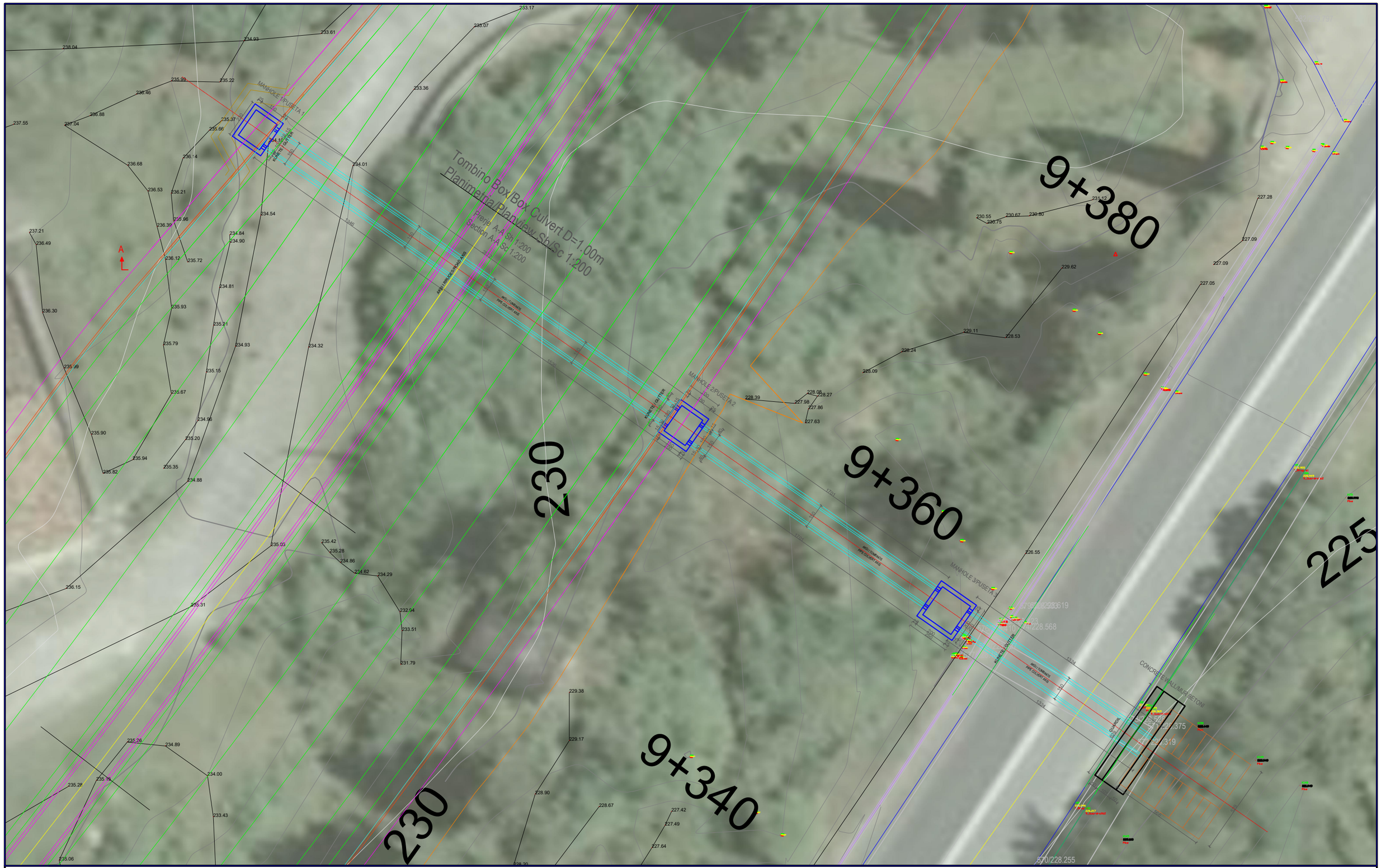

INVESTITORI / INVESTOR
"Autoriteti Rrugor Shqiptar"

Address: Rr. "Sami Frasheri", Nr 33, Tirane
Mob: 04 222 3600
E-mail: info@arrsh.gov.al

JV: "InfraKonsult" shpk & "HMK-Consulting" shpk

"Studim Projektim - Zgjerimi i segmentit rrugor dalje Elbasan-Prrenjas-Qafe Thane", (Faza II) / "Design Study of road segment exit Elbasan-Prrenjas-Qafe Thane" (Phase II)

Planimetria e Tombinos-Km +9+356
Planview Culvert - Km +9+356

FAZA - PROJEKT ZBATIM
PHASE - DETAIL DESIGN

SHKALLA / SCALE	1:200 / 1:200	Data: Mars 2023 / Date: March 2023
VIZATIMI Nr: / PAGE No:	E (0)	

PROJEKTUES / DESIGN ENGINEERS:

Ing./Eng. Sokol METOJA
Ing./Eng. Redi STRUGA
Ing./Eng. Orgest MËRTIKA

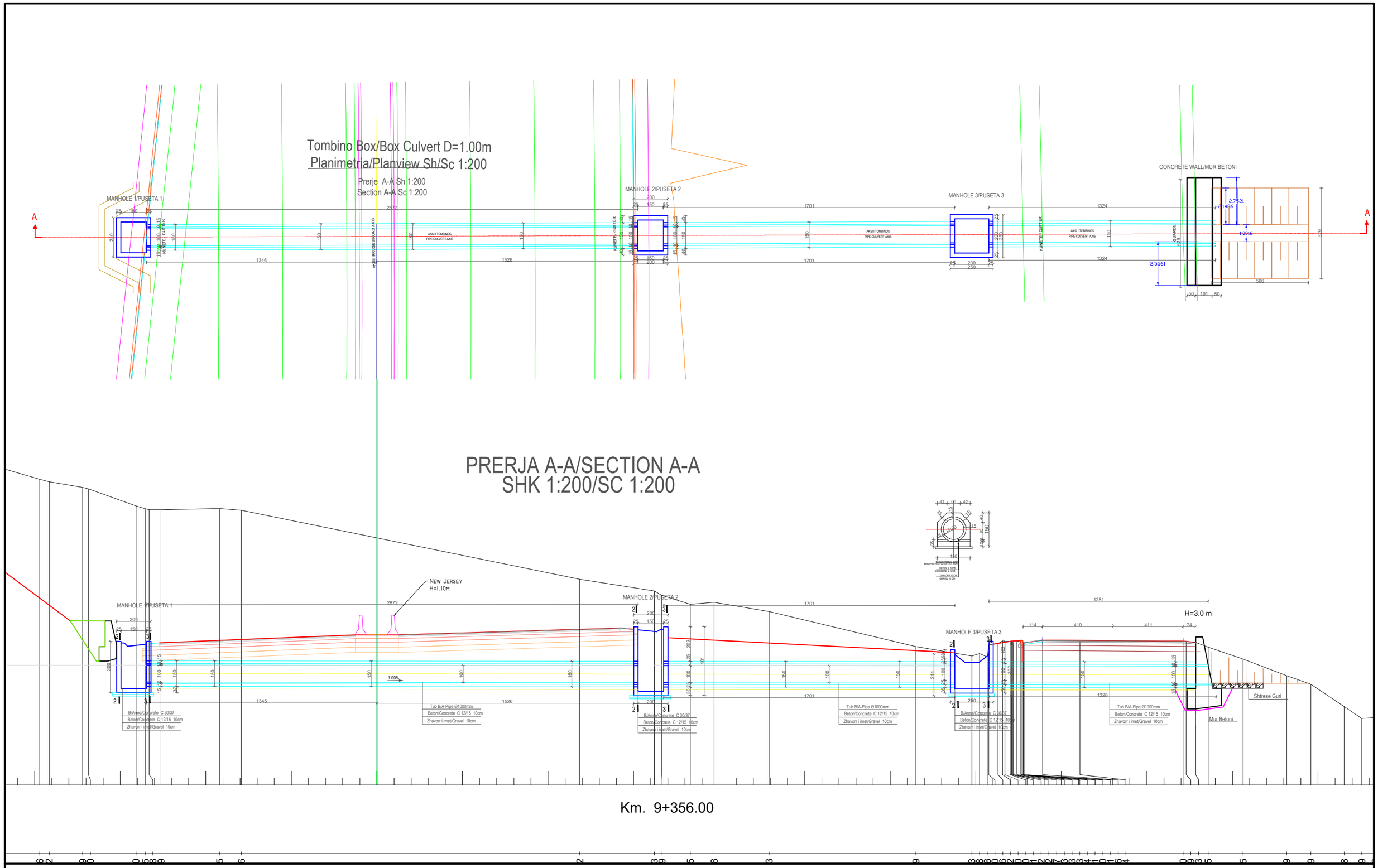

INVESTITORI / INVESTOR
"Autoriteti Rrugor Shqiptar"

Address: Rr. "Sami Frasheri", Nr 33, Tirane
Mob: 04 222 3600
E-mail: info@arrsh.gov.al

JV: "InfraKonsult" shpk & "HMK-Consulting" shpk

"Studim Projektim - Zgjerimi i segmentit rrugor dalje Elbasan-Prrenjas-Qafe Thane", (Faza II) / "Design Study of road segment exit Elbasan-Prrenjas-Qafe Thane" (Phase II)

Tombino Rrethore D=1.00m-Km +9+356/ Circle Culvert D=1.00m- Km +9+356

FAZA - PROJEKT ZBATIM
PHASE - DETAIL DESIGN

SHKALLA 1:200	Data: Mars 2023
SCALE 1:200	Date: March 2023
VIZATIMI Nr:	
PAGE No:	E (1)

PROJEKTUES:
DESIGN ENGINEERS:
Ing./Eng. Sokol METOJA
Ing./Eng. Redi STRUGA
Ing./Eng. Orgest MËRTIKA

PRERJET E PUSETES 1 /MANHOLE SECTION 1

PLANIMETRIA E PUSETES/
MANHOLE PLANVIEW

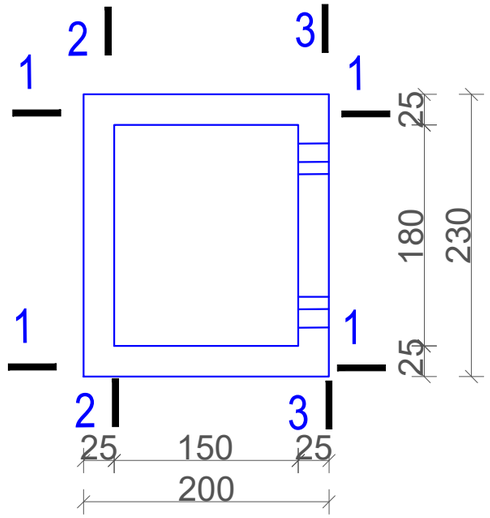

PRERJA/SECTION 1-1
Sh/Sc 1:150

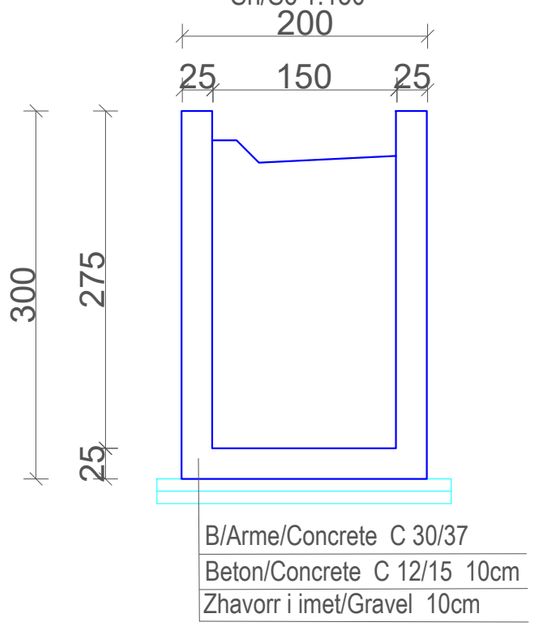

PRERJA/SECTION 2-2
Sh/Sc 1:150

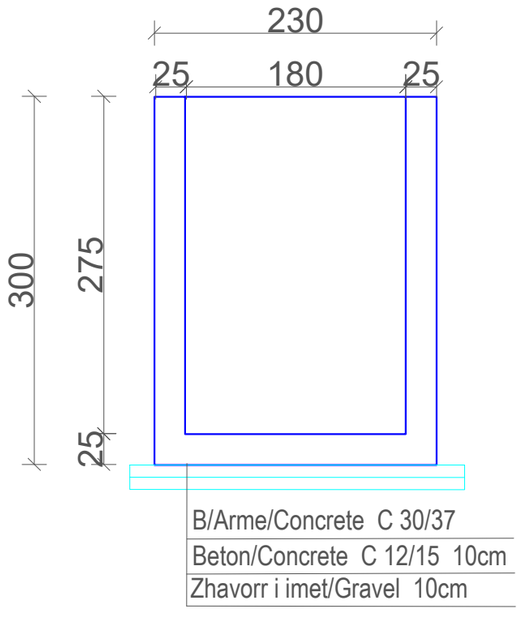

PRERJA/SECTION 3-3
Sh/Sc 1:150

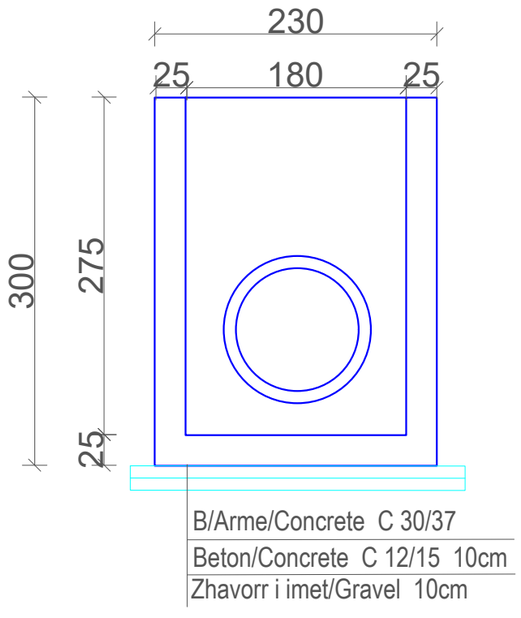

PRERJAE MURIT DHE PRERJA E TOMBINOS/ WALL SECTION &CULVERT SECTION

MUR BETONI
H=2.5 m

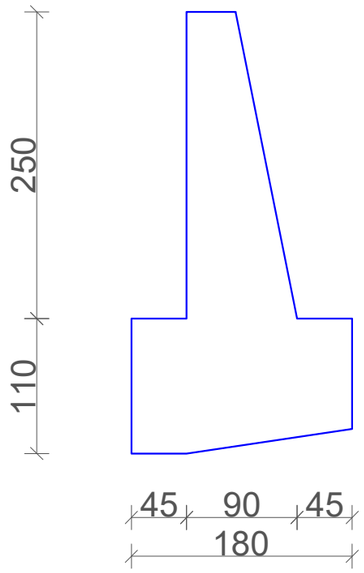

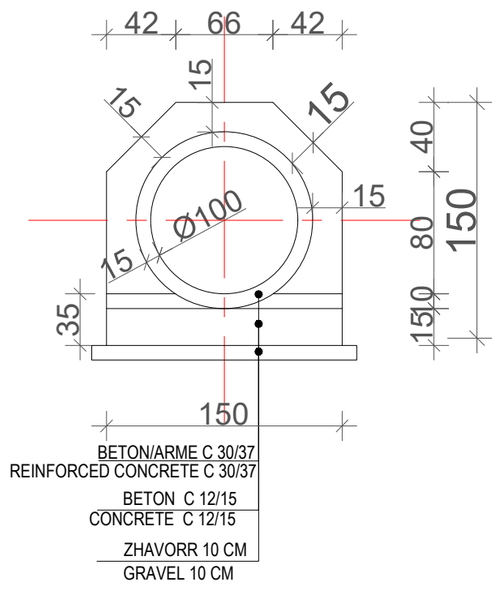

INVESTITORI / INVESTOR
"Autoriteti Rrugor Shqiptar"
Address: Rr. "Sami Frasheri", Nr 33, Tirane
Mob: 04 222 3600
E-mail: info@arrsh.gov.al

InfraKonsult konsulence inxhinierike
HMK-CONSULTING SH.P.K Konsulence-Projektim-Mbikqyrje
JV: "InfraKonsult" shpk & "HMK-Consulting" shpk

"Studim Projektim - Zgjerimi i segmentit rrugor dalje Elbasan-Prrenjas-Qafe Thane", (Faza II) / "Design Study of road segment exit Elbasan-Prrenjas-Qafe Thane" (Phase II)

PRERJA E PUSETES 2X2.3X3 KM +9+356
MANHOLE SECTION 2X2.3X3 KM +9+356
PRERJA E TOMBINOS D=1.00m KM +9+356
CULVERT SECTION D=1.00m KM +9+356
MUR BETONI KM +9+356/CONCRETE WALL KM +9+356

FAZA - PROJEKT ZBATIM
PHASE - DETAIL DESIGN

SHKALLA	*1:50*	*Data: Mars 2023*
SCALE	*1:50*	*Date: March 2023*
VIZATIMI Nr:		
PAGE No:	*E (2)*	

PROJEKTUES
DESIGN ENGINEERS:
Ing./Eng. Sokol METOJA
Ing./Eng. Redi STRUGA
Ing./Eng. Orgest MËRTIKA

ARMIMI I PUSETES 1/REINFORCED MANHOLE 1

PRERJA/SECTION 1-1
Sh/Sc 1:150

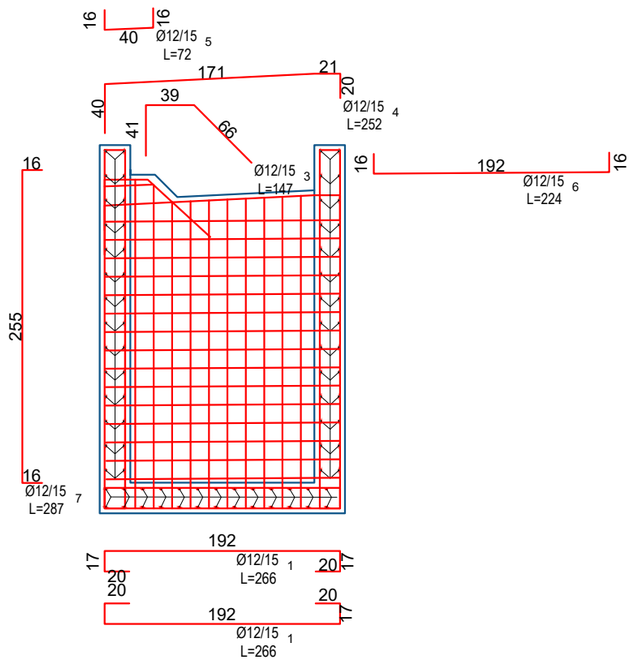

PRERJA/SECTION 2-2
Sh/Sc 1:150

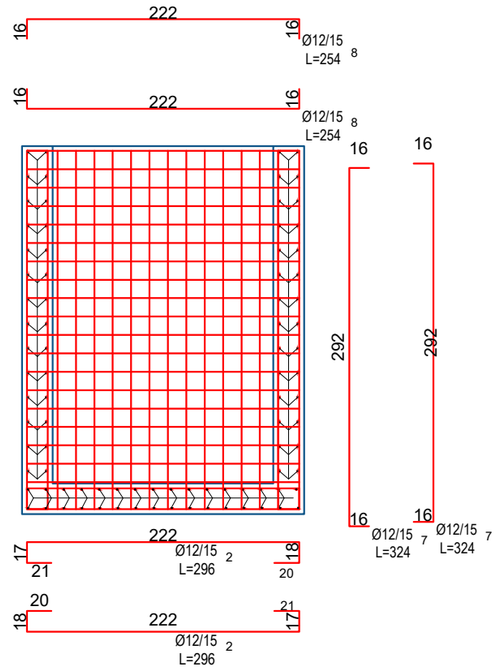

PRERJA/SECTION 3-3
Sh/Sc 1:150

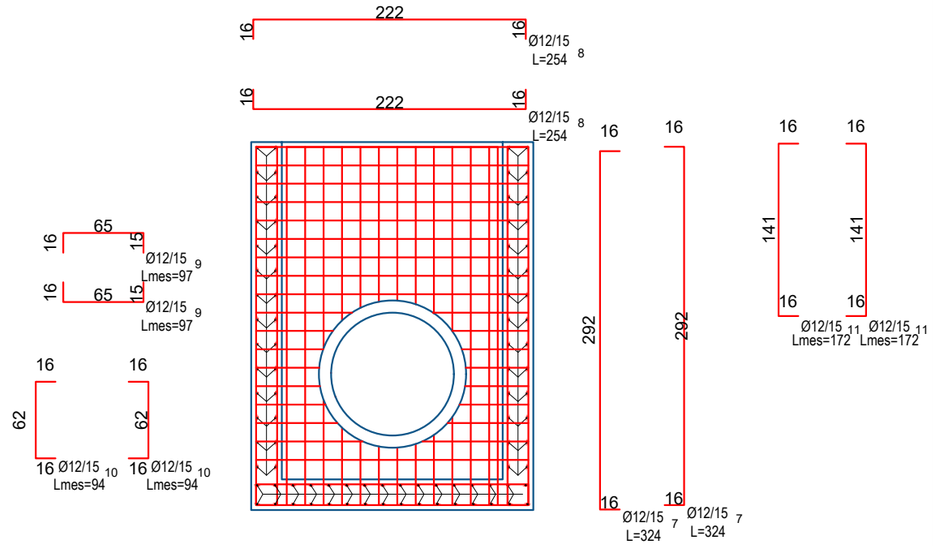

ARMIMI NE PRERJE/
REINFORCMENT SECTION

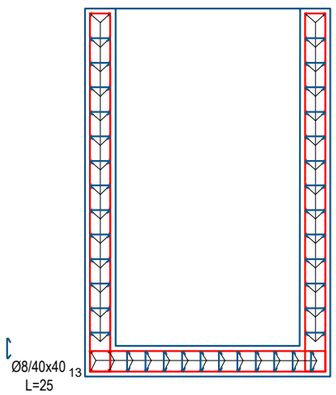

ELEMENTI		SPECIFIKIMI I ARMATURES					SPECIFIKIMI I ELEMENTIT			TOTALI *(KG)*
Tipi	Cop	Poz	Φ	l (cm)	cope	L (m)	Φ	ΣLtot*(m)*	Pesha *(per kg)*	
PUSETA 2x2.3x3,km +9+356	1	1	12	266	26	69.16	***6***		*0.222*	
		2	12	296	30	88.8	***8***	38	*0.395*	15
		3	12	147	4	5.88	***10***		*0.617*	
		4	12	252	4	10.08	***12***	636	*0.888*	564
		5	12	72	4	2.88	***14***		*1.208*	
		6	12	224	60	134.4	***16***		*1.578*	
		7	12	324	32	103.68	***18***		*1.998*	
		8	12	254	58	147.32	***20***		*2.466*	
		9	12	97	32	31.04	***22***		*2.984*	
		10	12	94	16	15.04	***24***		*3.551*	
		11	12	172	16	27.52	***25***		*3.853*	
		12	8	25	150	37.5				
										579

Reinforced steel Ø 6 - 10 mm	kg	**15**
Reinforced steel Ø > 10 mm	kg	**564**
CONCRETE C30/37	m³	**6.5**
Layer C12/15	m³	**0.55**
Gravel	m³	**0.55**

INVESTITORI / INVESTOR
"Autoriteti Rrugor Shqiptar"
Address: Rr. "Sami Frasheri", Nr 33, Tirane
Mob: 04 222 3600
E-mail: info@arrsh.gov.al

JV: "InfraKonsult" shpk & "HMK-Consulting" shpk

"Studim Projektim - Zgjerimi i segmentit rrugor dalje Elbasan-Prrenjas-Qafe Thane", (Faza II) / "Design Study of road segment exit Elbasan-Prrenjas-Qafe Thane" (Phase II)

ARMIMI I PUSETES 1/KM +9+356

REINFORCED CULVERT 1 /KM +9+356

FAZA - PROJEKT ZBATIM
PHASE - DETAIL DESIGN

SHKALLA 1:50 *SCALE* 1:50

Data: Mars 2023
Date: March 2023

VIZATIMI Nr: *PAGE No:* *E (3)*

PROJEKTUES
DESIGN ENGINEERS:
Ing./Eng. Sokol METOJA
Ing./Eng. Redi STRUGA
Ing./Eng. Orgest MËRTIKA

PRERJET E PUSETES 2 /MANHOLE SECTION 2

PLANIMETRIA E PUSETES/
MANHOLE PLANVIEW

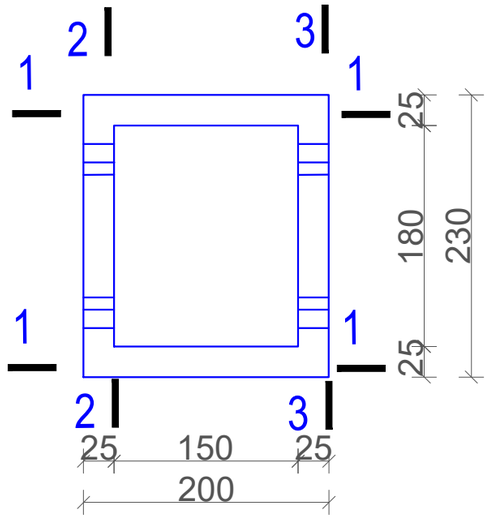

PRERJA/SECTION 1-1
Sh/Sc 1:150

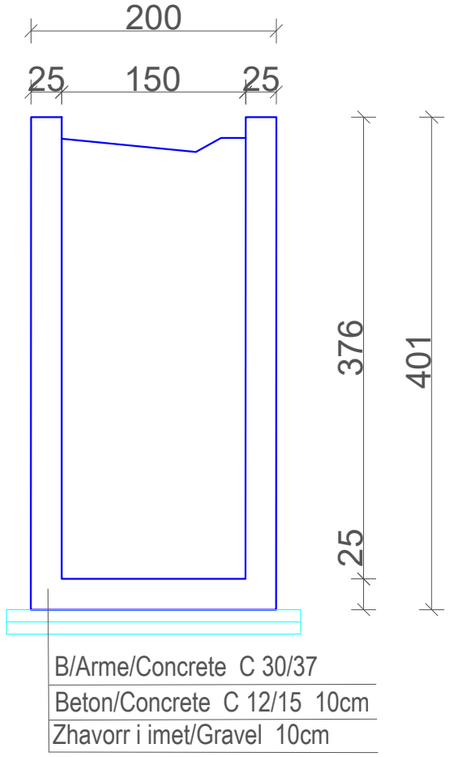

PRERJA/SECTION 3-3
Sh/Sc 1:150

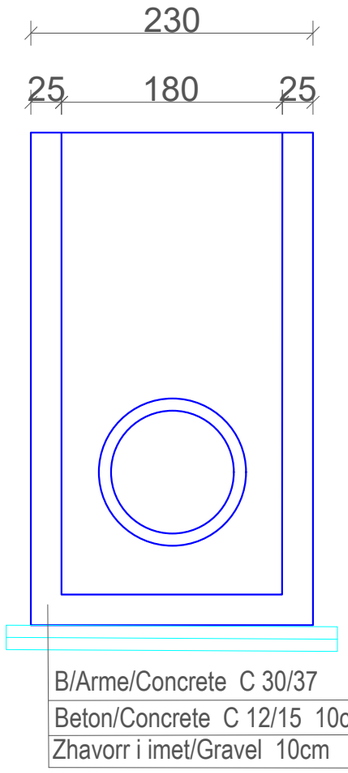

PRERJA/SECTION 2-2
Sh/Sc 1:150

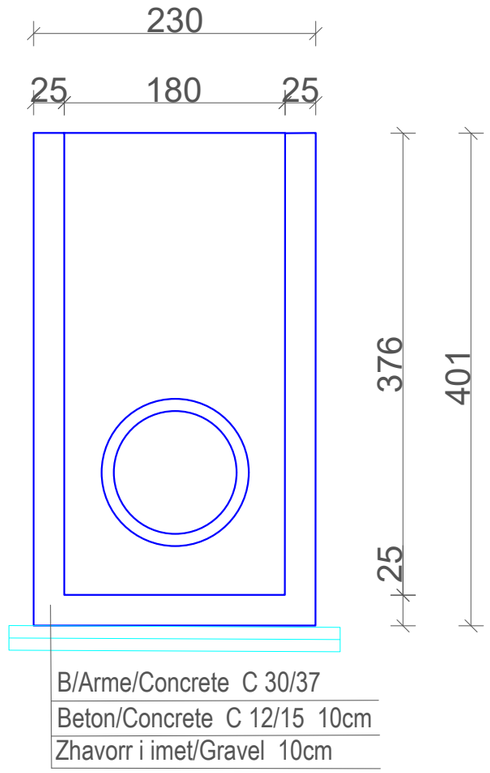

INVESTITORI / INVESTOR
"Autoriteti Rrugor Shqiptar"
Address: Rr. "Sami Frasheri", Nr 33, Tirane
Mob: 04 222 3600
E-mail: info@arrsh.gov.al

JV: "InfraKonsult" shpk & "HMK-Consulting" shpk

"Studim Projektim - Zgjerimi i segmentit rrugor dalje Elbasan-Prrenjas-Qafe Thane", (Faza II) / "Design Study of road segment exit Elbasan-Prrenjas-Qafe Thane" (Phase II)

PRERJA E PUSETES 2X2.3X4 KM +9+356
MANHOLE SECTION 2X2.3X4 KM +9+356

FAZA - PROJEKT ZBATIM
PHASE - DETAIL DESIGN

SHKALLA 1:50 *SCALE* 1:50	*Data: Mars 2023* *Date: March 2023*
VIZATIMI Nr: *PAGE No:* *E (4)*	

PROJEKTUES
DESIGN ENGINEERS:
Ing./Eng. Sokol METOJA
Ing./Eng. Redi STRUGA
Ing./Eng. Orgest MËRTIKA

ARMIMI I PUSETES 2/REINFORCED MANHOLE 2

PRERJA/SECTION 1-1
Sh/Sc 1:150

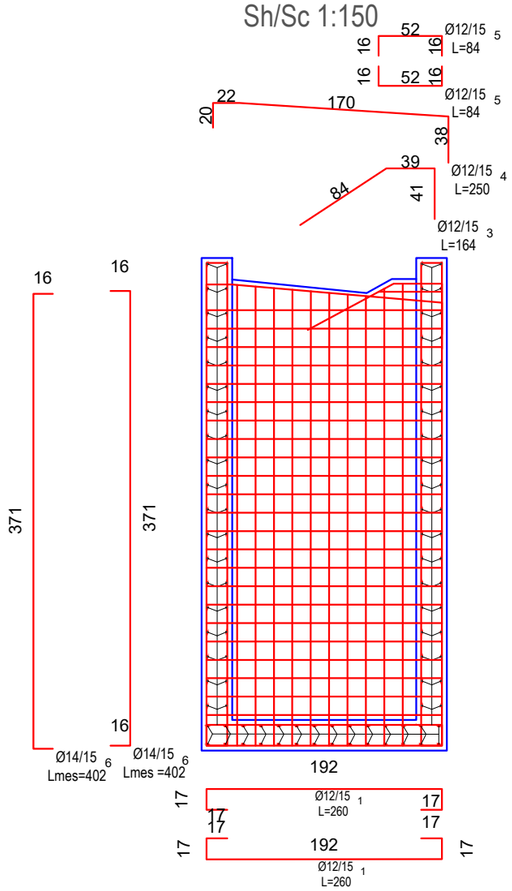

PRERJA 2-2/PRERJA 3-3
SECTION 2-2/SECTION 3-3
Sh/Sc 1:150

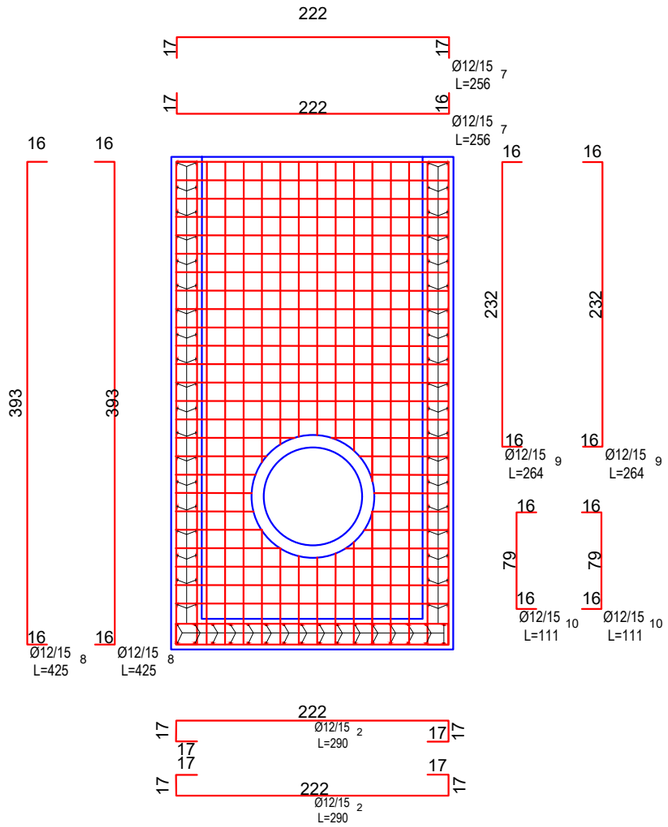

ARMIMI NE PRERJE/
REINFORCMENT SECTION

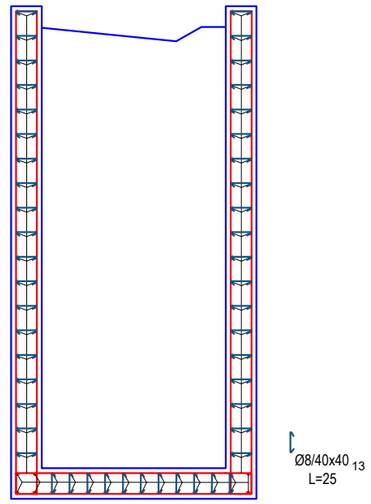

ELEMENTI		SPECIFIKIMI I ARMATURES					SPECIFIKIMI I ELEMENTIT			TOTALI *(KG)*
Tipi	Cop	Poz	Φ	l (cm)	cope	L (m)	Φ	ΣLtot*(m)*	Pesha *(per kg)*	
PUSETA 2x2.3x3,km +9+356	1	1	12	260	15	39	***6***		*0.222*	
		2	12	290	13	37.7	***8***		*0.395*	
		3	12	164	2	3.28	***10***		*0.617*	
		4	12	250	2	5	***12***	633	*0.888*	562
		5	12	84	2	1.68	***14***		*1.208*	
		6	12	402	20	80.4	***16***		*1.578*	
		7	12	256	72	184.32	***18***		*1.998*	
		8	12	425	24	102	***20***		*2.466*	
		9	12	264	28	73.92	***22***		*2.984*	
		10	12	111	28	31.08	***24***		*3.551*	
		11	12	106	28	29.68	***25***		*3.853*	
		12	12	25	180	45				
										562

Reinforced steel Ø 6 - 10 mm	kg	
Reinforced steel Ø > 10 mm	kg	**562**
CONCRETE C30/37	m³	**6.5**
Layer C12/15	m³	**0.6**
Gravel	m³	**0.6**

INVESTITORI / INVESTOR
"Autoriteti Rrugor Shqiptar"
Address: Rr. "Sami Frasheri", Nr 33, Tirane
Mob: 04 222 3600
E-mail: info@arrsh.gov.al

JV: "InfraKonsult" shpk & "HMK-Consulting" shpk

"Studim Projektim - Zgjerimi i segmentit rrugor dalje Elbasan-Prrenjas-Qafe Thane", (Faza II) / "Design Study of road segment exit Elbasan-Prrenjas-Qafe Thane" (Phase II)

ARMIMI I PUSETES 2/KM +9+356

REINFORCED CULVERT 2 /KM +9+356

FAZA - PROJEKT ZBATIM
PHASE - DETAIL DESIGN

SHKALLA 1:50 *SCALE* 1:50

Data: Mars 2023
Date: March 2023

VIZATIMI Nr: *PAGE No:* *E (5)*

PROJEKTUES
DESIGN ENGINEERS:
Ing./Eng. Sokol METOJA
Ing./Eng. Redi STRUGA
Ing./Eng. Orgest MËRTIKA

PRERJET E PUSETES 3 /MANHOLE SECTION 3

PLANIMETRIA E PUSETES/
MANHOLE PLANVIEW

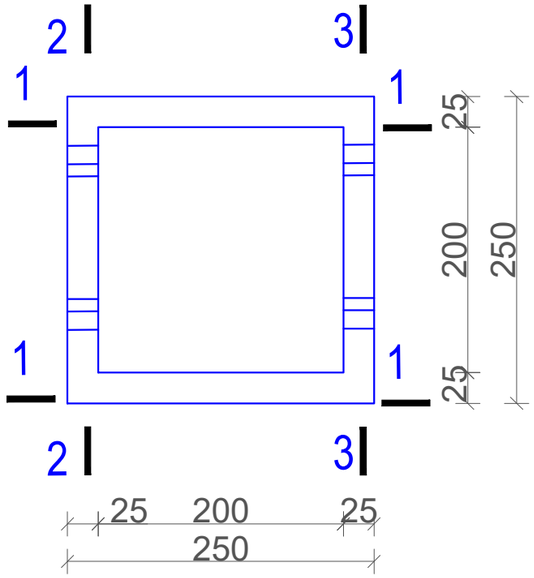

PRERJA/SECTION 1-1
Sh/Sc 1:150

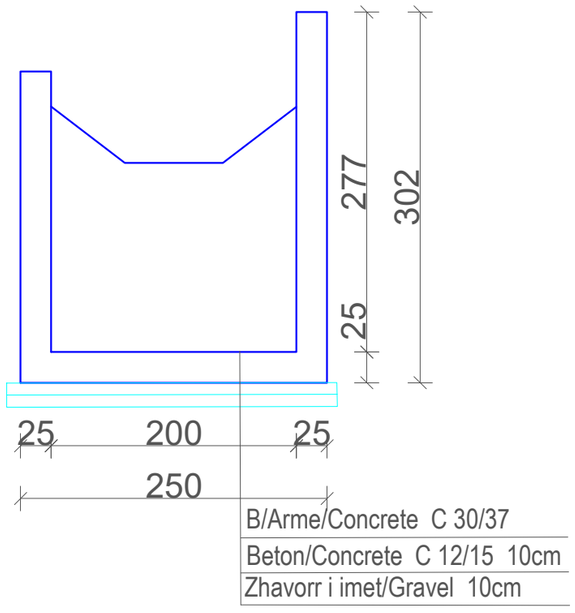

PRERJA/SECTION 2-2
Sh/Sc 1:150

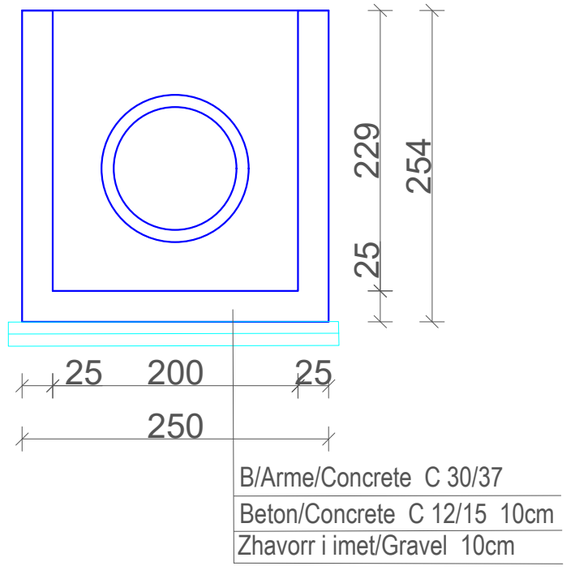

PRERJA/SECTION 3-3
Sh/Sc 1:150

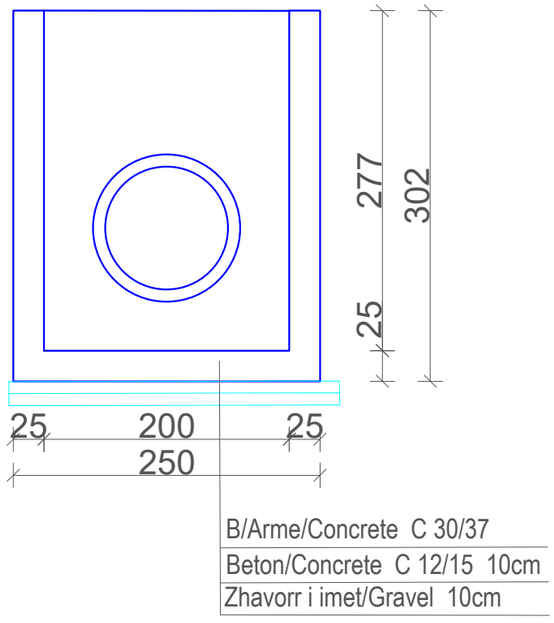

INVESTITORI / INVESTOR
"Autoriteti Rrugor Shqiptar"

Address: Rr. "Sami Frasheri", Nr 33, Tirane

Mob: 04 222 3600
E-mail: info@arrsh.gov.al

JV: "InfraKonsult" shpk & "HMK-Consulting" shpk

"Studim Projektim - Zgjerimi i segmentit rrugor dalje Elbasan-Prrenjas-Qafe Thane", (Faza II) / "Design Study of road segment exit Elbasan-Prrenjas-Qafe Thane" (Phase II)

PRERJA E PUSETES 3 KM +9+356

MANHOLE 3 SECTION KM +9+356

FAZA - PROJEKT ZBATIM
PHASE - DETAIL DESIGN

SHKALLA 1:50 *SCALE* 1:50	*Data: Mars 2023* *Date: March 2023*
VIZATIMI Nr: *PAGE No:* *E (6)*	

PROJEKTUES:
DESIGN ENGINEERS:

Ing./Eng. Sokol METOJA
Ing./Eng. Redi STRUGA
Ing./Eng. Orgest MËRTIKA

RMIMI I PUSETES 3/REINFORCED MANHOLE 3

PRERJA/SECTION 1-1
Sh/Sc 1:150

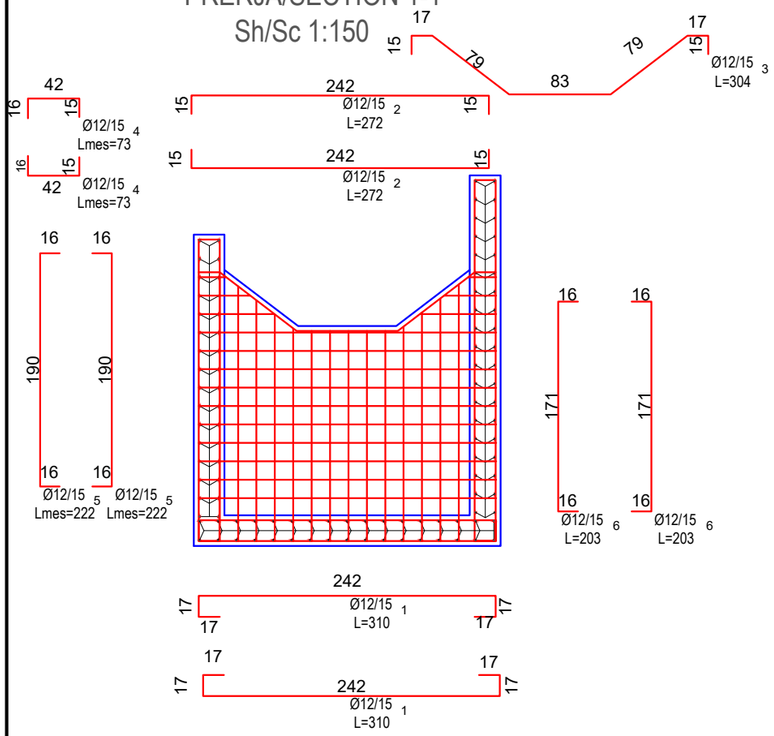

PRERJA 2-2/PRERJA 3-3
SECTION 2-2/SECTION 3-3
Sh/Sc 1:150

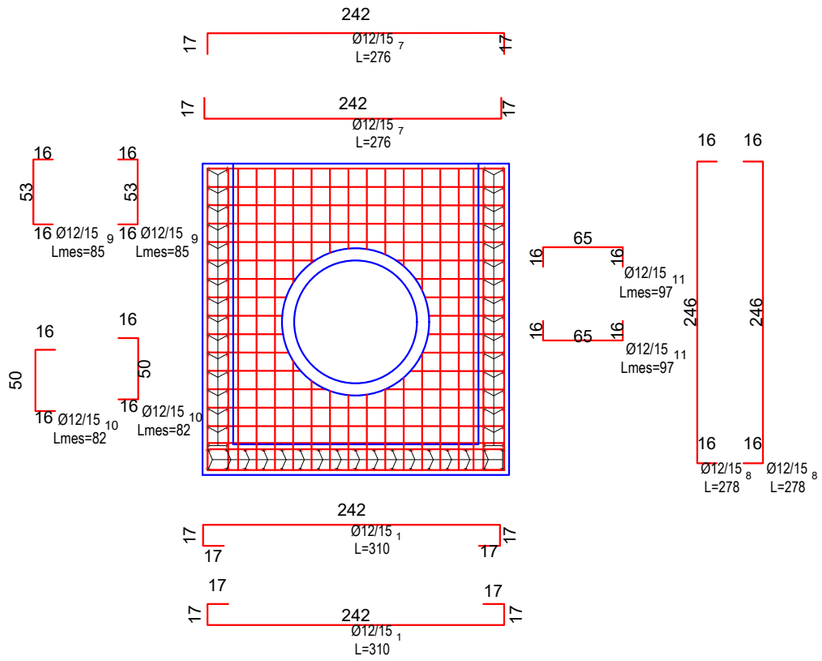

ARMIMI NE PRERJE/
REINFORCMENT SECTION

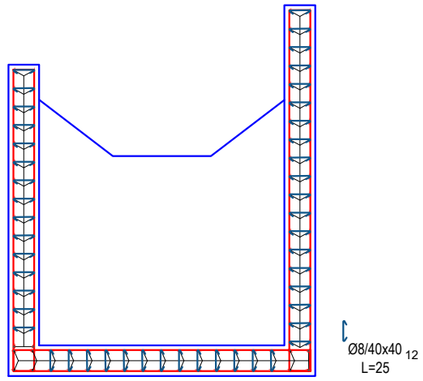

ELEMENTI		SPECIFIKIMI I ARMATURES					SPECIFIKIMI I ELEMENTIT			TOTALI *(KG)*
Tipi	Cop	Poz	Φ	l (cm)	cope	L (m)	Φ	ΣLtot*(m)*	Pesha *(per kg)*	
PUSETA 2x2.3x3,km +9+356	1	1	12	310	32	99.2	***6***		*0.222*	
		2	12	272	40	108.8	***8***	32	*0.395*	12
		3	12	304	4	12.16	***10***		*0.617*	
		4	12	73	24	17.52	***12***	628	*0.888*	558
		5	12	222	32	71.04	***14***		*1.208*	
		6	12	203	24	48.72	***16***		*1.578*	
		7	12	276	32	88.32	***18***		*1.998*	
		8	12	278	24	66.72	***20***		*2.466*	
		9	12	85	32	27.2	***22***		*2.984*	
		10	12	82	32	26.24	***24***		*3.551*	
		11	12	97	64	62.08	***25***		*3.853*	
		12	8	25	126	31.5				
										570

Reinforced steel Ø 6 - 10 mm	kg	**12**
Reinforced steel Ø > 10 mm	kg	**558**
CONCRETE C30/37	m³	**6.5**
Layer C12/15	m³	**0.7**
Gravel	m³	**0.7**

INVESTITORI / INVESTOR
"Autoriteti Rrugor Shqiptar"
Address: Rr. "Sami Frasheri", Nr 33, Tirane
Mob: 04 222 3600
E-mail: info@arrsh.gov.al

JV: "InfraKonsult" shpk & "HMK-Consulting" shpk

"Studim Projektim - Zgjerimi i segmentit rrugor dalje Elbasan-Prrenjas-Qafe Thane", (Faza II) / "Design Study of road segment exit Elbasan-Prrenjas-Qafe Thane" (Phase II)

ARMIMI I PUSETES 2/KM +9+356

REINFORCED CULVERT 2 /KM +9+356

FAZA - PROJEKT ZBATIM
PHASE - DETAIL DESIGN

SHKALLA 1:50 *SCALE* 1:50

Data: Mars 2023
Date: March 2023

VIZATIMI Nr: *PAGE No:* *E (7)*

PROJEKTUES:
DESIGN ENGINEERS:
Ing./Eng. Sokol METOJA
Ing./Eng. Redi STRUGA
Ing./Eng. Orgest MËRTIKA

ARMIMI I TUBIT D=100cm
SH.1:50

PRERJE TERTHORE
CROSS SECTION

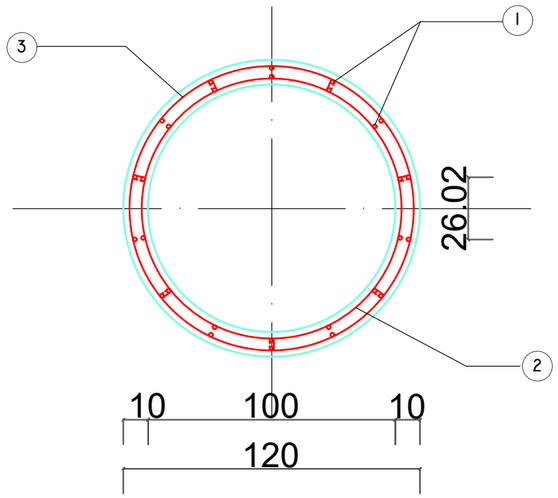

PRERJE GJATESORE
LONGITUDINAL SECTION

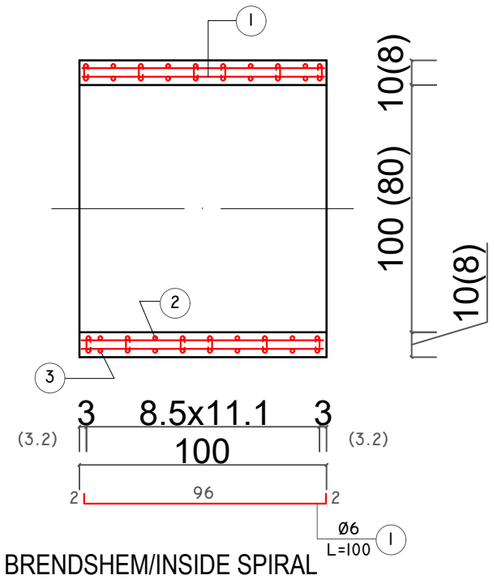

ARMATURA SPIRALE PER D=100
SPIRAL REINFORCEMENT

I JASHTEM/OUTSIDE SPIRAL REBAR

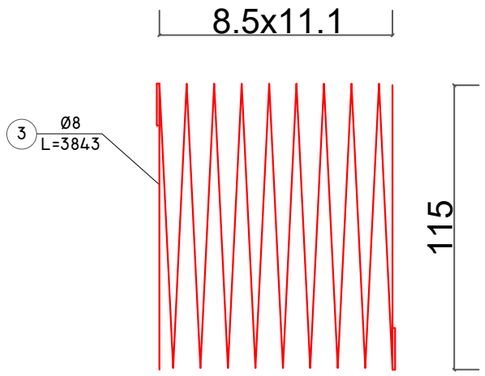

I BRENDSHEM/INSIDE SPIRAL REBAR

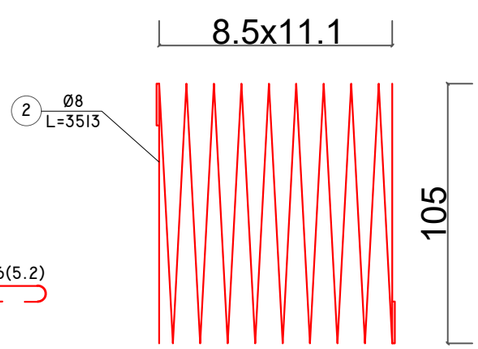

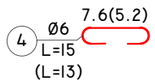

TABELA E HEKURIT PER NJE TB D=100cm
BAR SPECIFICATIONS FOR ONE TB D=100cm

NR. POZ.	Ø mm	L cm	SASIA cope	L m	PERMBLEDHJE E ARMATURES			
					Ø mm	ΣL m	PESHA kg/ml	PESHA kg
1	6	100	28	28.0	6	34.30	0.222	7.61
2	8	3513	1	35.13	8	76.60	0.395	29.06
3	8	3843	1	38.43				
4	6	15	42	6.30				
HEKURI PERIODIK PER NJE TUB/REBAR SPEC FOR ONE TUBOLR CULVERT							kg	36.67
HEKUR PERIODIK PER 58.97 TUB/ REBAR WEIGHT FOR 58.97 TUBOLAR CULVERTS							kg	2162
BETON C30/37 PER NJE TUB/ CONCRETE =30/37 FOR ONE TUBOLAR CULVERT							m^3	0.42
BETON C30/37 PER 58.97 TUB/ CONCRETE =30/37 FOR 58.97 TUBOLAR CULVERT							m^3	25.00
BETON C30/37 PER NJE TUB/ CONCRETE =12/15 FOR ONE TUBOLAR CULVERT							m^3	0.21
BETON C30/37 PER 58.97 TUB/ CONCRETE =12/15 FOR 58.97 TUBOLAR CULVERT							m^3	8.8455
ZHAVORR PER 58.97 TUB/ GRAVELFOR 58.97 TUBOLAR CULVERT							m^3	8.8455

SHENIM

1. TUBAT REALIZOHEN ME B/ARME C30/37 DHE CELIK PERIODIK B500C ,FYK=500MPA.
2. TUBAT JANE PARASHIKUAR PER LARTESI MBUSHJE MBI H=4.0m.

NOTE

1. THE PIPES ARE MADE WITH REINFORCED CONCRETE C30/37 AND PERIODIC STEEL B500C,FYK=500MPA.
2. THE PIPES ARE DESIGNED FOR A FILLING HEIGHT ABOVE H=4.0M.

INVESTITORI / INVESTOR
"Autoriteti Rrugor Shqiptar"
Address: Rr. "Sami Frasheri", Nr 33, Tirane
Mob: 04 222 3600
E-mail: info@arrsh.gov.al

JV: "InfraKonsult" shpk & "HMK-Consulting" shpk

"Studim Projektim - Zgjerimi i segmentit rrugor dalje Elbasan-Prrenjas-Qafe Thane", (Faza II) / "Design Study of road segment exit Elbasan-Prrenjas-Qafe Thane" (Phase II)

ARMIMI I PUSETES D=1.00m/KM +9+356
MANHOLE REINFORCMENT D=1.00 /KM +9+356

FAZA - PROJEKT ZBATIM
PHASE - DETAIL DESIGN

SHKALLA / SCALE	1:50 / 1:50	Data: Mars 2023 / Date: March 2023
VIZATIMI Nr: / PAGE No:	E (8)	

PROJEKTUES / DESIGN ENGINEERS:
Ing./Eng. Sokol METOJA
Ing./Eng. Redi STRUGA
Ing./Eng. Orgest MËRTIKA

INVESTITORI / INVESTOR

"Autoriteti Rrugor Shqiptar"

Address: Rr. "Sami Frasheri", Nr 33, Tirane

Mob: 04 222 3600
E-mail: info@arrsh.gov.al

JV: "InfraKonsult" shpk & "HMK-Consulting" shpk

"Studim Projektim - Zgjerimi i segmentit rrugor dalje Elbasan-Prrenjas-Qafe Thane", (Faza II) / "Design Study of road segment exit Elbasan-Prrenjas-Qafe Thane" (Phase II)

Planimetria e Tombinos-Km +9+699.72
Planview Culvert - Km +9+699.72

FAZA - PROJEKT ZBATIM
PHASE - DETAIL DESIGN

SHKALLA / SCALE	1:200 / 1:200	Data: Mars 2023 / Date: March 2023
VIZATIMI Nr: / PAGE No:	E (0)	

PROJEKTUES / DESIGN ENGINEERS:
Ing./Eng. Sokol METOJA
Ing./Eng. Redi STRUGA
Ing./Eng. Orgest MËRTIKA

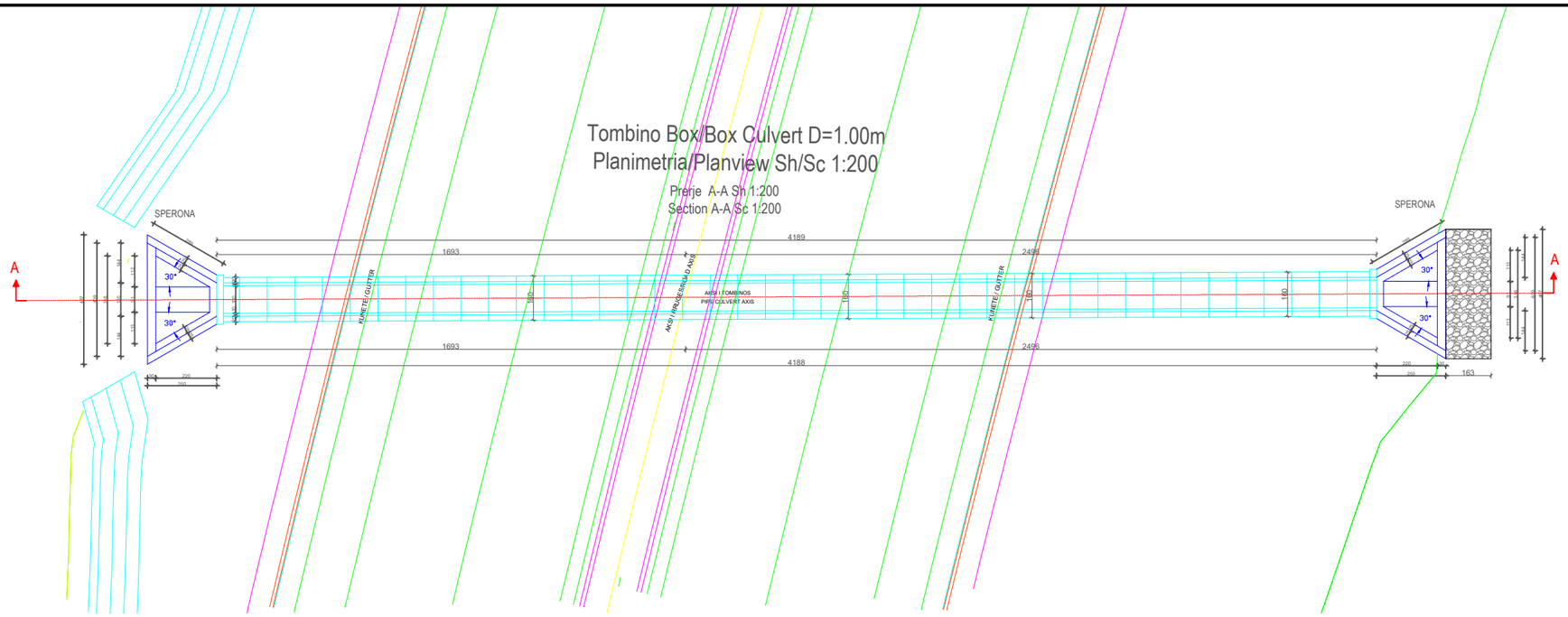

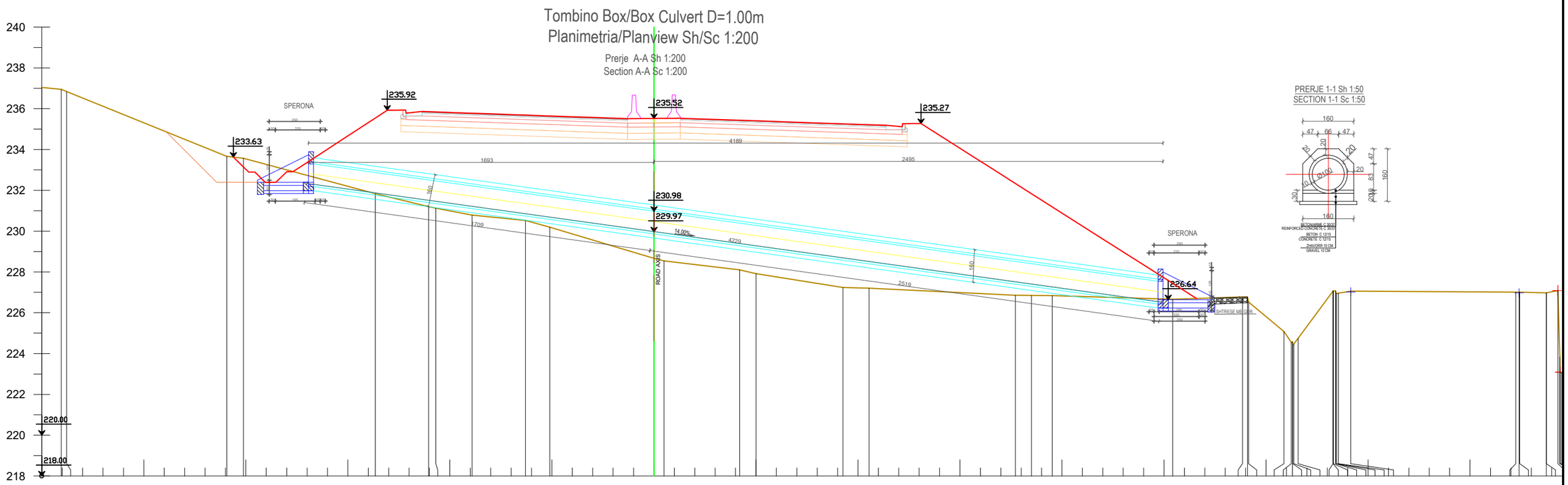

Km. 9+699.72

INVESTITORI / INVESTOR
"Autoriteti Rrugor Shqiptar"

Address: Rr. "Sami Frasheri", Nr 33, Tirane

Mob: 04 222 3600
E-mail: info@arrsh.gov.al

JV: "InfraKonsult" shpk & "HMK-Consulting" shpk

"Studim Projektim - Zgjerimi i segmentit rrugor dalje Elbasan-Prrenjas-Qafe Thane", (Faza II) / "Design Study of road segment exit Elbasan-Prrenjas-Qafe Thane" (Phase II)

Tombino Rrethore D=1.00m-Km +9+699.72/ Circle Culvert D=1.00m- Km +9+699.72

FAZA - PROJEKT ZBATIM
PHASE - DETAIL DESIGN

SHKALLA 1:200	*Data: Mars 2023*
SCALE 1:200	*Date: March 2023*
VIZATIMI Nr:	
PAGE No: E (1)	

PROJEKTUES
DESIGN ENGINEERS:

Ing./Eng. Sokol METOJA
Ing./Eng. Redi STRUGA
Ing./Eng. Orgest MËRTIKA

TOMBINO Ø1.00m
SH. 1:50

PRERJE GJATESORE TOMBINO Ø1.00

SPERONA
SH. 1:50

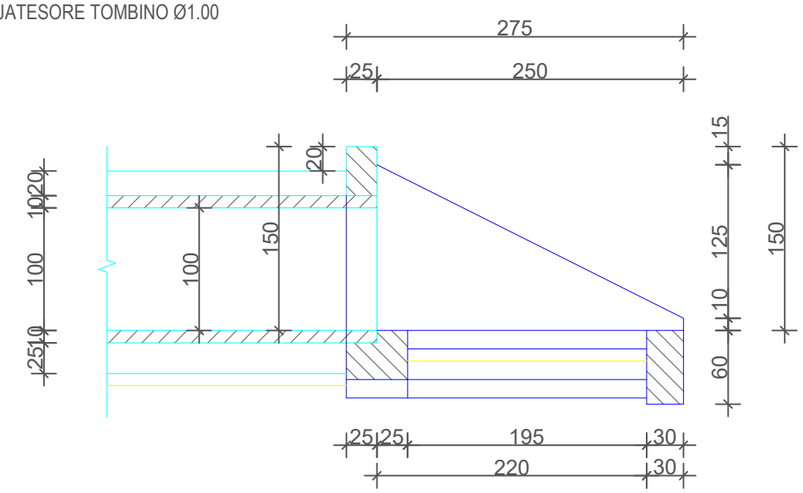

PRERJE TERTHORE SPERONA
SHK 1:50

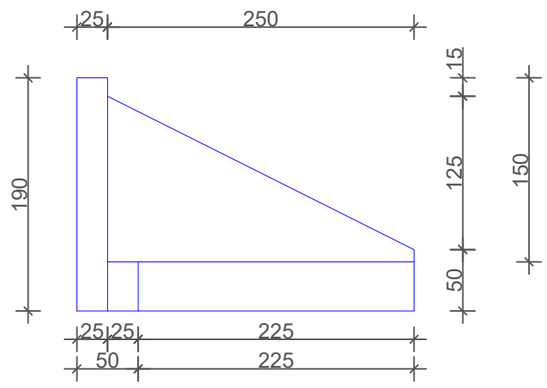

PRERJE 1-1 Sh 1:50
SECTION 1-1 Sc 1:50

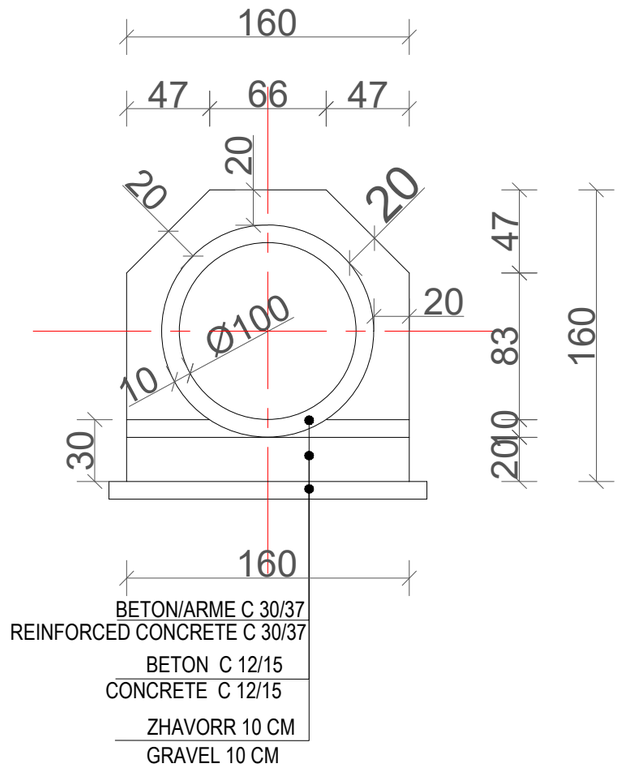

INVESTITORI / INVESTOR
"Autoriteti Rrugor Shqiptar"

Address: Rr. "Sami Frasheri", Nr 33, Tirane

Mob: 04 222 3600
E-mail: info@arrsh.gov.al

JV: "InfraKonsult" shpk & "HMK-Consulting" shpk

"Studim Projektim - Zgjerimi i segmentit rrugor dalje Elbasan-Prrenjas-Qafe Thane", (Faza II) / "Design Study of road segment exit Elbasan-Prrenjas-Qafe Thane" (Phase II)

PRERJA E TIP E TOMBINOS D=1.00 KM +9+699.72
PRERJA E MURIT PORTAL TIP SPERONE KM +9+699.72
SECTION OF CULVERT D=1.00 KM +9+699.72
SECTION OF PORTAL WALL SPERONE TYPE KM +9+699.72

FAZA - PROJEKT ZBATIM
PHASE - DETAIL DESIGN

SHKALLA 1:50 *SCALE* 1:50	*Data: Mars 2023* *Date: March 2023*
VIZATIMI Nr: *PAGE No:* *E (2)*	

PROJEKTUES:
DESIGN ENGINEERS:
Ing./Eng. Sokol METOJA
Ing./Eng. Redi STRUGA
Ing./Eng. Orgest MËRTIKA

ARMIMI I MUREVE NE HYRJE DHE DALJE TE TOMBINOS Ø1.00m

PRERJA 1-1

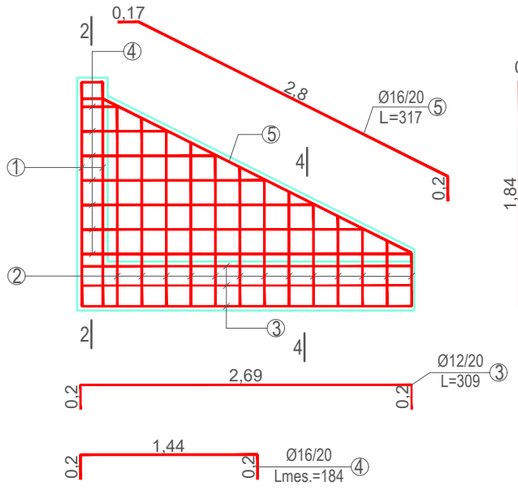

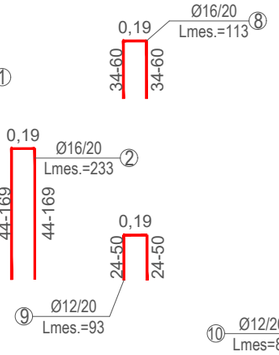

PRERJA 2-2

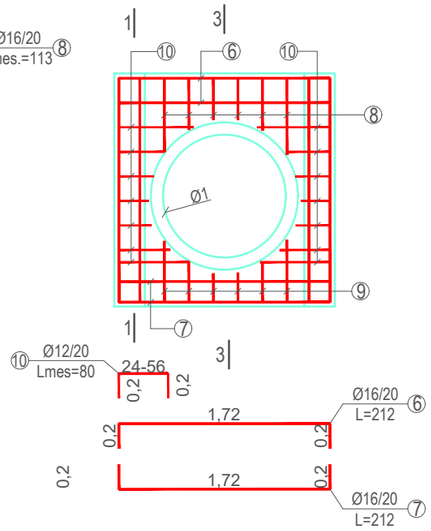

TABELA E HEKURAVE

NR	Ø mm	L cm	SASIA cope	L m	PERMBLEDHJA E ARMATURES Ø mm	ΣL m	PESHA kg/ml	PESHA kg
1	16	387	4	15.48	16	172.48	1.578	272.17
2	16	mes.233	26	60.58	12	310.99	0.888	276.16
3	12	309	24	74.16				
4	16	mes.184	28	51.52				
5	16	317	4	12.68				
6	16	212	4	8.48				
7	16	212	8	16.96				
8	16	mes.113	6	6.78				
9	12	mes.93	6	5.58				
10	12	mes.80	28	22.40				
11	12	190	9	17.10				
12	12	mes.391	12	46.92				
13	12	469	9	42.21				
13/1	12	mes.359	22	78.98				
14	12	mes.197	12	23.64				
REINFORCED STEEL KG/1 COPE SASIA E HEKURIT NE KG/1PCS								548.33kg
REINFORCED STEEL KG/2 COPE SASIA E HEKURIT NE KG/2PCS								1097kg
CONCRETE C30/37 FOR 1 PORTAL WALL SPERONA TYPE BETON C30/37 PER 1 MUR PORTAL TIP SPERONE								3m3
CONCRETE C30/37 FOR 2 PORTAL WALL SPERONA TYPE BETON C30/37 PER 2 MUR PORTAL TIP SPERONE								6m3
CONCRETE C12/15 FOR 1 PORTAL WALL SPERONA TYPE BETON C12/15 PER 1 MUR PORTAL TIP SPERONE								0.3m3
CONCRETE C12/15 FOR 2 PORTAL WALL SPERONA TYPE BETON C12/15 PER 2 MURE PORTAL TIP SPERONE								0.6m3
GRAVEL FOR PORTAL WALL SPERONA TYPE ZHAVORR PER MURIN PORTAL TIP SPERONE								0.6m3

PRERJA 3-3

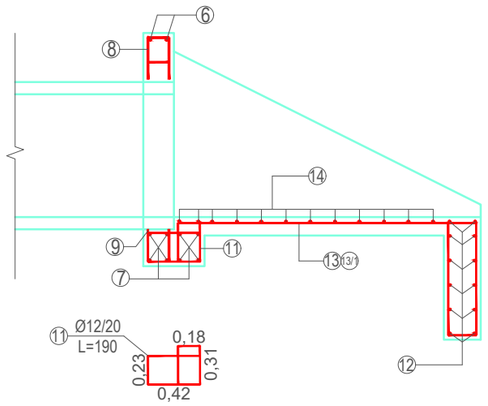

PRERJA 4-4

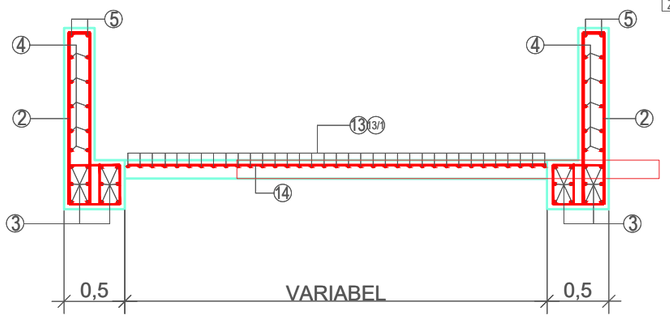

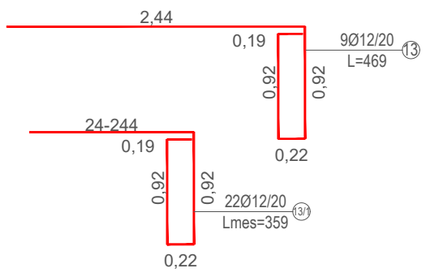

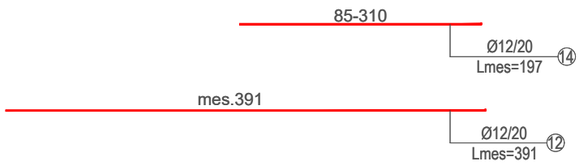

INVESTITORI / INVESTOR
"Autoriteti Rrugor Shqiptar"
Address: Rr. "Sami Frasheri", Nr 33, Tirane
Mob: 04 222 3600
E-mail: info@arrsh.gov.al

JV: "InfraKonsult" shpk & "HMK-Consulting" shpk

"Studim Projektim - Zgjerimi i segmentit rrugor dalje Elbasan-Prrenjas-Qafe Thane", (Faza II) / "Design Study of road segment exit Elbasan-Prrenjas-Qafe Thane" (Phase II)

ARMIMI I SPERONES/KM +9+699.72

REINFORCMENT OF PORTAL WALL /KM +9+699.72

FAZA - PROJEKT ZBATIM
PHASE - DETAIL DESIGN

SHKALLA / SCALE	1:50 / 1:50	Data: Mars 2023 / Date: March 2023
VIZATIMI Nr: / PAGE No:	E (3)	

PROJEKTUES:
DESIGN ENGINEERS:
Ing./Eng. Sokol METOJA
Ing./Eng. Redi STRUGA
Ing./Eng. Orgest MËRTIKA

ARMIMI I TUBIT D=100cm
SH.1:50

PRERJE TERTHORE
CROSS SECTION

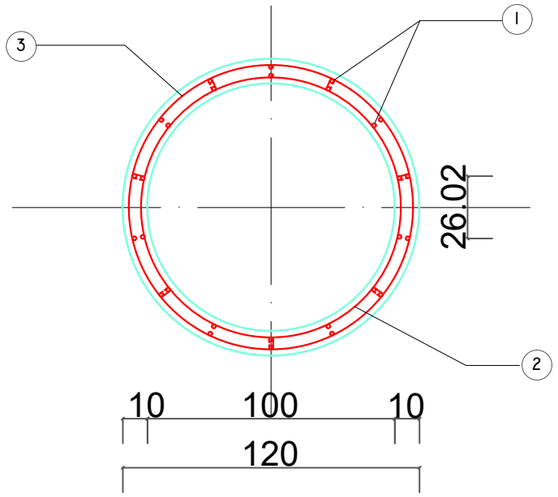

PRERJE GJATESORE
LONGITUDINAL SECTION

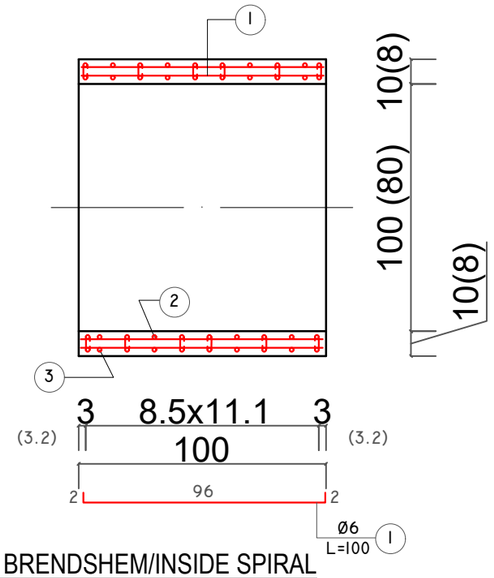

ARMATURA SPIRALE PER D=100
SPIRAL REINFORCEMENT

I JASHTEM/OUTSIDE SPIRAL REBAR

8.5x11.1

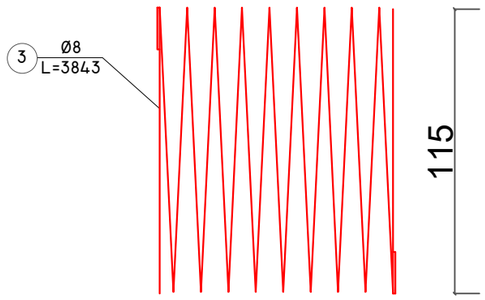

I BRENDSHEM/INSIDE SPIRAL REBAR

8.5x11.1

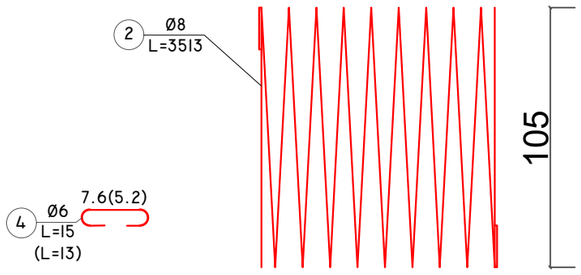

TABELA E HEKURIT PER NJE TB D=100cm
BAR SPECIFICATIONS FOR ONE TB D=100cm

NR. POZ.	Ø mm	L cm	SASIA cope	L m	PERMBLEDHJE E ARMATURES			
					Ø mm	ΣL m	PESHA kg/ml	PESHA kg
1	6	100	28	28.0	6	34.30	0.222	7.61
2	8	3513	1	35.13	8	76.60	0.395	29.06
3	8	3843	1	38.43				
4	6	15	42	6.30				
HEKURI PERIODIK PER NJE TUB/REBAR SPEC FOR ONE TUBOLR CULVERT							kg	36.67
HEKUR PERIODIK PER 41.89 TUB/ REBAR WEIGHT FOR 41.89 TUBOLAR CULVERTS							kg	1536
BETON C30/37 PER NJE TUB/ CONCRETE =30/37 FOR ONE TUBOLAR CULVERT							m^3	0.42
BETON C30/37 PER 41.89 TUB/ CONCRETE =30/37 FOR 41.89 TUBOLAR CULVERT							m^3	17.35
BETON C30/37 PER NJE TUB/ CONCRETE =12/15 FOR ONE TUBOLAR CULVERT							m^3	0.21
BETON C30/37 PER 41.89 TUB/ CONCRETE =12/15 FOR 41.89 TUBOLAR CULVERT							m^3	8.677
ZHAVORR PER 41.89 TUB/ GRAVELFOR 41.89 TUBOLAR CULVERT							m^3	8.677

SHENIM

1. TUBAT REALIZOHEN ME B/ARME C30/37 DHE CELIK PERIODIK B500C ,FYK=500MPA.
2. TUBAT JANE PARASHIKUAR PER LARTESI MBUSHJE MBI H=4.0m.

NOTE

1. THE PIPES ARE MADE WITH REINFORCED CONCRETE C30/37 AND PERIODIC STEEL B500C,FYK=500MPA.
2. THE PIPES ARE DESIGNED FOR A FILLING HEIGHT ABOVE H=4.0M.

INVESTITORI / INVESTOR
"Autoriteti Rrugor Shqiptar"
Address: Rr. "Sami Frasheri", Nr 33, Tirane
Mob: 04 222 3600
E-mail: info@arrsh.gov.al

JV: "InfraKonsult" shpk & "HMK-Consulting" shpk

"Studim Projektim - Zgjerimi i segmentit rrugor dalje Elbasan-Prrenjas-Qafe Thane", (Faza II) / "Design Study of road segment exit Elbasan-Prrenjas-Qafe Thane" (Phase II)

ARMIMI I TOMBINOS D=1.00m/KM +9+699.72

REINFORCMENT OF CULVERT D=1.00 /KM +9+699.72

FAZA - PROJEKT ZBATIM
PHASE - DETAIL DESIGN

SHKALLA 1:50 / SCALE 1:50

Data: Mars 2023 / Date: March 2023

VIZATIMI Nr: / PAGE No: E (4)

PROJEKTUES / DESIGN ENGINEERS:
Ing./Eng. Sokol METOJA
Ing./Eng. Redi STRUGA
Ing./Eng. Orgest MËRTIKA

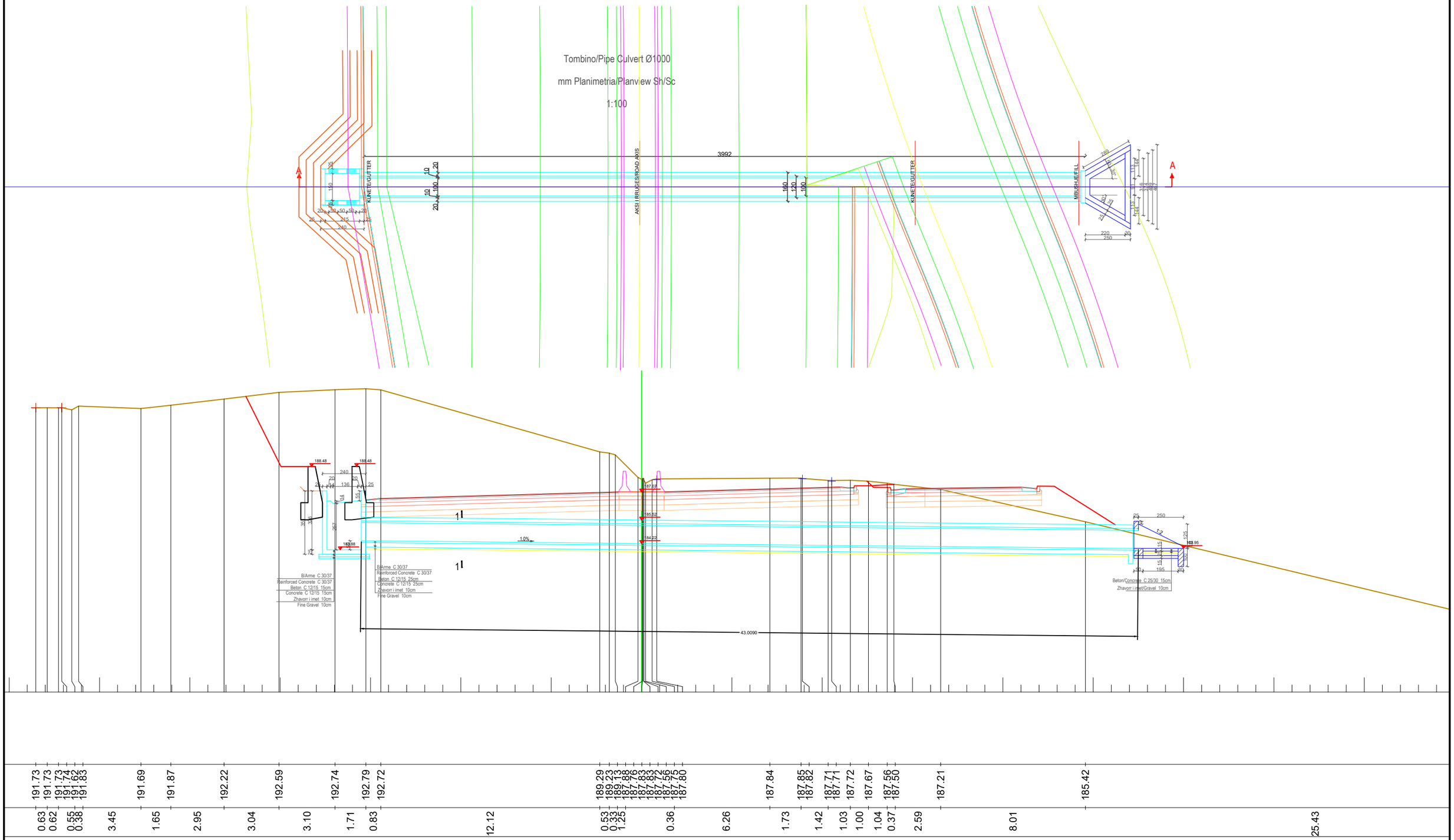

Km. 6+635.00

INVESTITORI / INVESTOR

"Autoriteti Rrugor Shqiptar"

Address: Rr. "Sami Frasheri", Nr 33, Tirane

Mob: 04 222 3600
E-mail: info@arrsh.gov.al

JV: "InfraKonsult" shpk & "HMK-Consulting" shpk

"Studim Projektim - Zgjerimi i segmentit rrugor dalje Elbasan-Prrenjas-Qafe Thane", (Faza II) / "Design Study of road segment exit Elbasan-Prrenjas-Qafe Thane" (Phase II)

Tombino Ø1000mm / Pipe Culvert Ø1000mm - Km 6+635.00

FAZA - PROJEKT ZBATIM
PHASE - DETAIL DESIGN

SHKALLA / SCALE	1:200 / 1:200	Data: Mars 2023 / Date: March 2023
VIZATIMI Nr: / PAGE No:	E (1)	

PROJEKTUES: / DESIGN ENGINEERS:

Ing./Eng. Sokol METOJA
Ing./Eng. Redi STRUGA
Ing./Eng. Orgest MËRTIKA

ARMIMI I TUBIT D=100cm

SH.I:25

PRERJE TERTHORE
CROSS SECTION

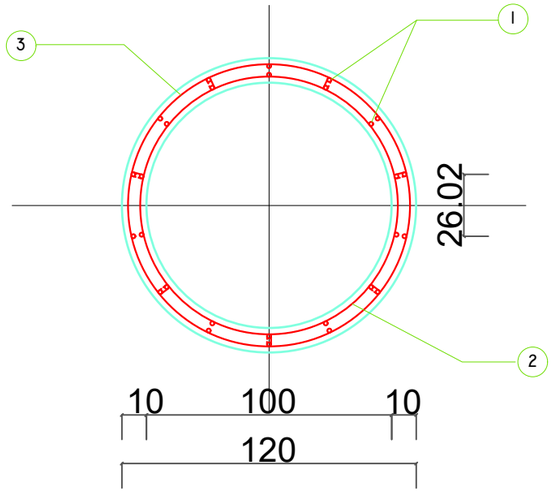

PRERJE GJATESORE
LONGITUDINAL SECTION

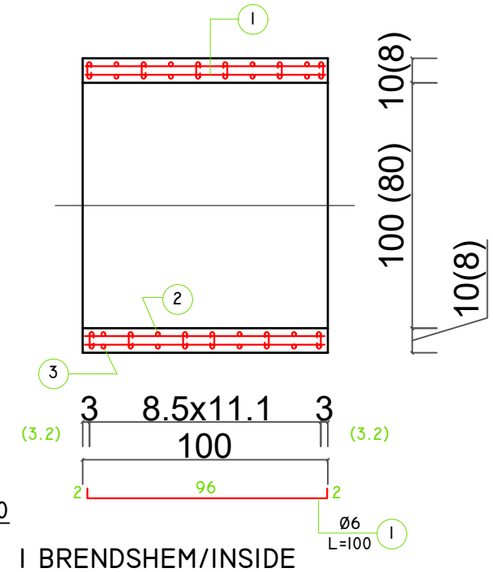

ARMATURA SPIRALE PER D=100
SPIRAL REINFORCEMENT

I JASHTEM/OUTSIDE
SPIRAL REBAR

8.5x11.1

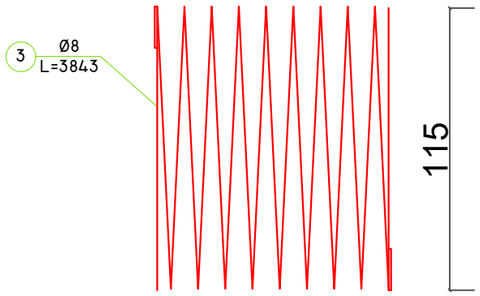

I BRENDSHEM/INSIDE
SPIRAL REBAR

8.5x11.1

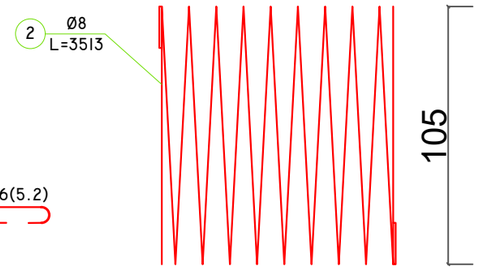

TABELA E HEKURIT PER NJE TB D=100cm
BAR SPECIFICATIONS FOR ONE TB D=100cm

NR. POZ.	Ø mm	L cm	SASIA cope	L m	PERMBLEDHJE E ARMATURES			
					Ø mm	ΣL m	PESHA kg/ml	PESHA kg
1	6	100	28	28.0	6	34.30	0.222	7.61
2	8	3513	1	35.13	8	76.60	0.395	29.06
3	8	3843	1	38.43				
4	6	15	42	6.30				
HEKURI PERIODIK PER NJE TUB/REBAR SPEC FOR ONE TUBOLR CULVERT							kg	36.67
HEKUR PERIODIK PER 43 TUB/ REBAR WEIGHT FOR 43 TUBOLAR CULVERTS							kg	1576.81
BETON C30/37 PER NJE TUB/ CONCRETE =30/37 FOR ONE TUBOLAR CULVERT							m^3	0.42
BETON C30/37 PER 43 TUB/ CONCRETE =30/37 FOR 43 TUBOLAR CULVERT							m^3	18.06

SHENIM

1. TUBAT REALIZOHEN ME B/ARME C30/37 DHE CELIK PERIODIK B500C ,FYK=500MPA.
2. TUBAT JANE PARASHIKUAR PER LARTESI MBUSHJE MBI H=4.0m.

NOTE

1. THE PIPES ARE MADE WITH REINFORCED CONCRETE C30/37 AND PERIODIC STEEL B500C,FYK=500MPA.
2. THE PIPES ARE DESIGNED FOR A FILLING HEIGHT ABOVE H=4.0M.

PRERJE TERTHORE
SHK: 1;50

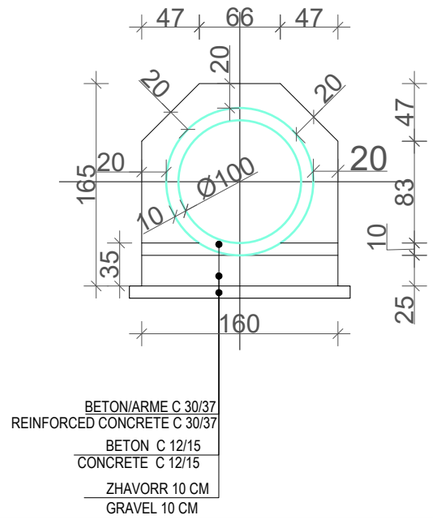

INVESTITORI / INVESTOR
"Autoriteti Rrugor Shqiptar"
Address: Rr. "Sami Frasheri", Nr 33, Tirane
Mob: 04 222 3600
E-mail: info@arrsh.gov.al

InfraKonsult konsulence inxhinierike
HMK-CONSULTING SH.P.K Konsulence-Projektim-Mbikqyrje
JV: "InfraKonsult" shpk & "HMK-Consulting" shpk

"Studim Projektim - Zgjerimi i segmentit rrugor dalje Elbasan-Prrenjas-Qafe Thane", (Faza II) / "Design Study of road segment exit Elbasan-Prrenjas-Qafe Thane" (Phase II)

Armimi i tombinos Ø1000mm / Pipe Culvert Ø1000mm reinforcement - Km 6+635.00

FAZA - PROJEKT ZBATIM
PHASE - DETAIL DESIGN

SHKALLA / SCALE 1:25 1:50
Data: Mars 2023
Date: March 2023
VIZATIMI Nr: / PAGE No: E (2)

PROJEKTUES: / DESIGN ENGINEERS:
Ing./Eng. Sokol METOJA
Ing./Eng. Redi STRUGA
Ing./Eng. Orgest MËRTIKA

ARMIMI I MUREVE TE TOMBINOS Ø1.0m
TUBOLAR Ø1.0m CULVERT WALL REINFORCEMENT

PRERJA/SECTION 1-1
SH/Sc . 1:50

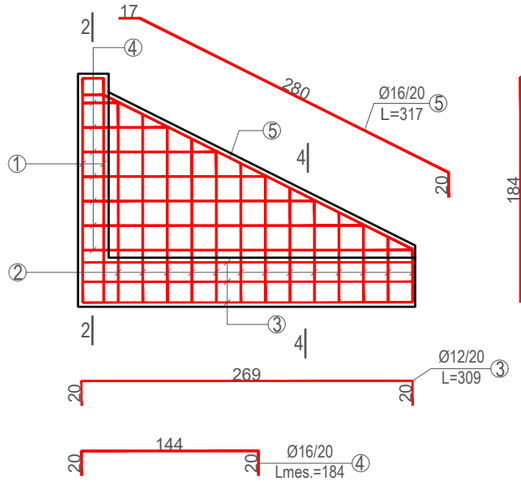

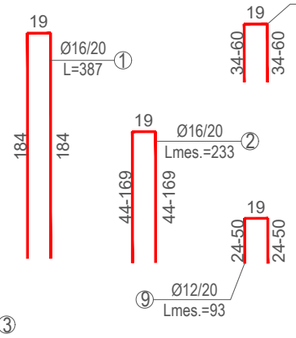

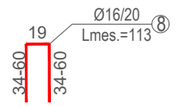

PRERJA/SECTION 2-2
SH/Sc . 1:50

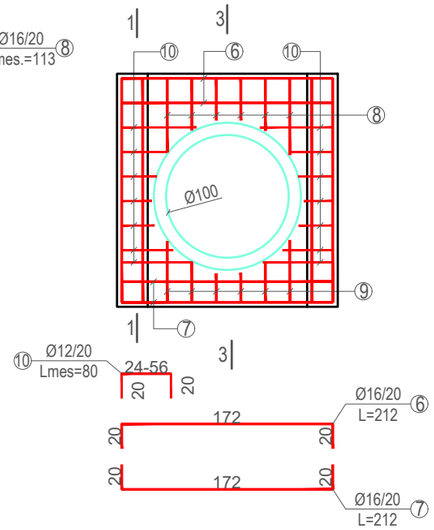

PRERJA/SECTION 3-3
SH/Sc . 1:50

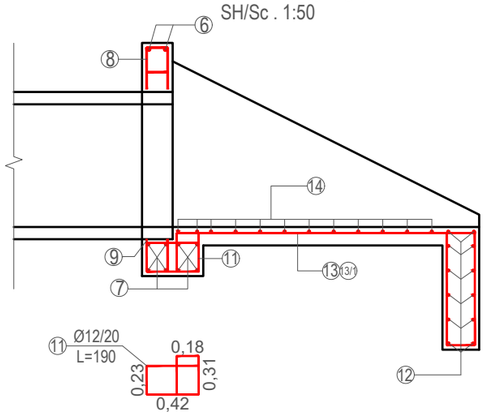

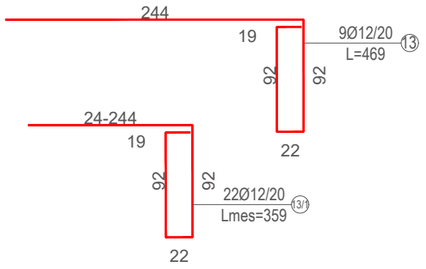

PRERJA/SECTION 4-4
SH/SC . 1:50

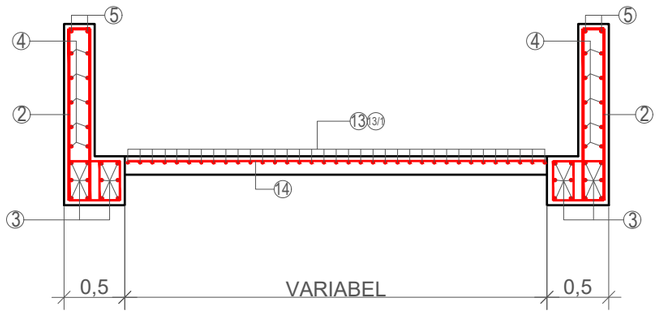

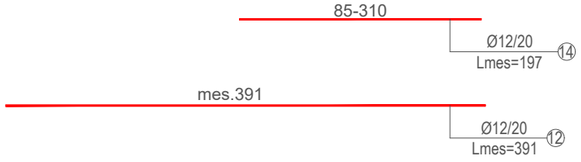

TABELA E HEKURAVE/BAR SPECIFICATIONS

NR	Ø mm	L cm	SASIA cope	L m	PERMBLEDHJA E ARMATURES			
					Ø mm	ΣL m	PESHA kg/ml	PESHA kg
1	16	387	4	15.48	16	172.48	1.578	272.17
2	16	mes.233	26	60.58	12	310.99	0.888	276.16
3	12	309	24	74.16				
4	16	mes.184	28	51.52				
5	16	317	4	12.68				
6	16	212	4	8.48				
7	16	212	8	16.96				
8	16	mes.113	6	6.78				
9	12	mes.93	6	5.58				
10	12	mes.80	28	22.40				
11	12	190	9	17.10				
12	12	mes.391	12	46.92				
13	12	469	9	42.21				
13/1	12	mes.359	22	78.98				
14	12	mes.197	12	23.64				
								548.33

INVESTITORI / INVESTOR
"Autoriteti Rrugor Shqiptar"
Address: Rr. "Sami Frasheri", Nr 33, Tirane
Mob: 04 222 3600
E-mail: info@arrsh.gov.al

InfraKonsult konsulence inxhinierike
HMK-CONSULTING SH.P.K Konsulence-Projektim-Mbikqyrje
JV: "InfraKonsult" shpk & "HMK-Consulting" shpk

"Studim Projektim - Zgjerimi i segmentit rrugor dalje Elbasan-Prrenjas-Qafe Thane", (Faza II) / "Design Study of road segment exit Elbasan-Prrenjas-Qafe Thane" (Phase II)

Armimi i mureve/ Wall reinforcement - Km 6+635.00

FAZA - PROJEKT ZBATIM
PHASE - DETAIL DESIGN

SHKALLA / SCALE	1:50	Data: Mars 2023 / Date: March 2023
VIZATIMI Nr: / PAGE No:	E (3)	

PROJEKTUES: / DESIGN ENGINEERS:
Ing./Eng. Sokol METOJA
Ing./Eng. Redi STRUGA
Ing./Eng. Orgest MËRTIKA

PRERJE E PUSETES/ MANHOLE SECTION sh./sc.1:50

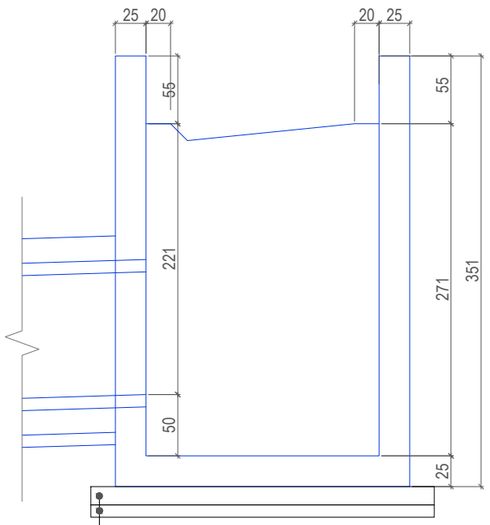

PLANIMETRI E PUSETES/MANHOLE PLANVIEW sh./sc.1:50

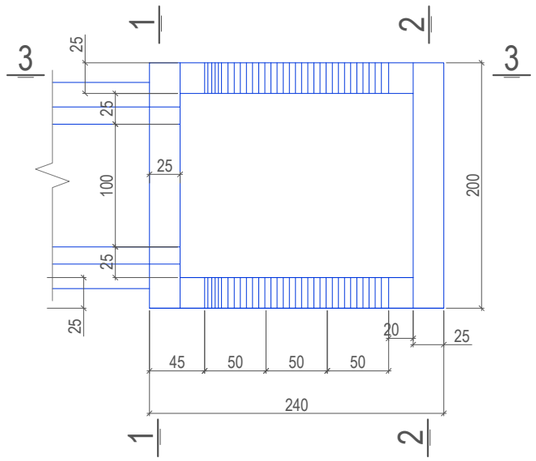

PRERJA/SECTION 3-3 sh./sc.1:50

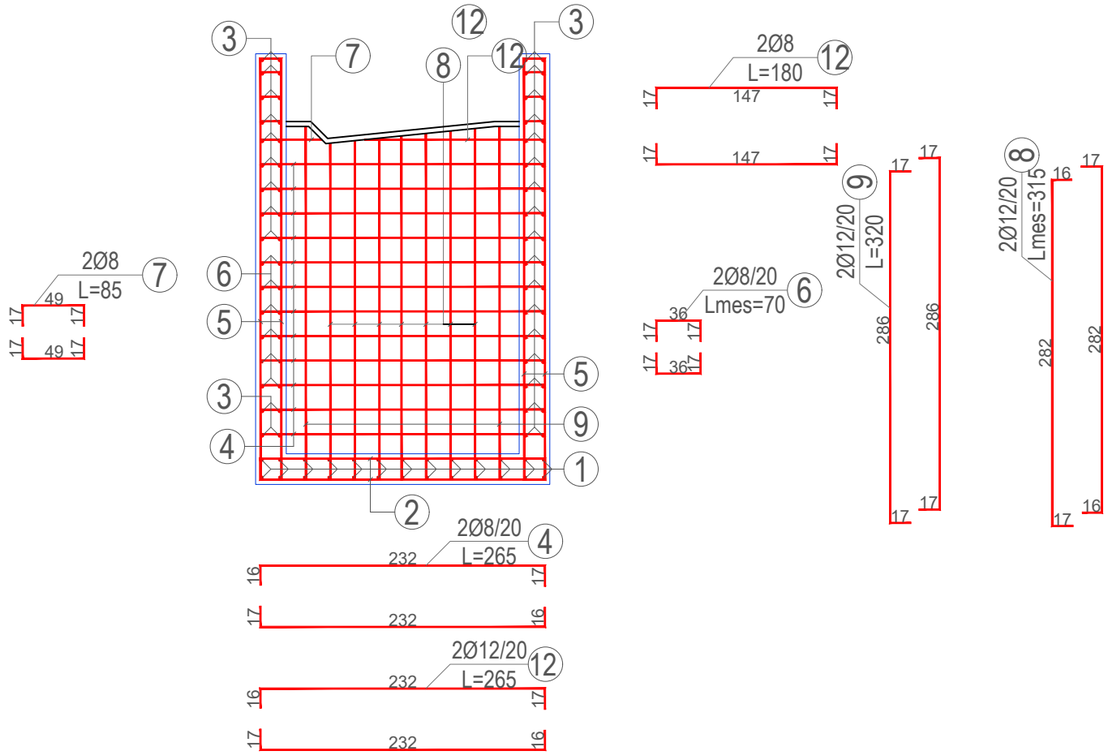

PRERJA/SECTION 1-1 sh./sc.1:50

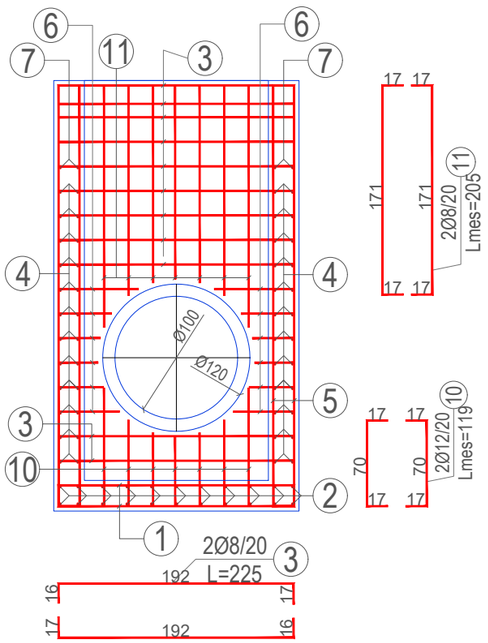

PRERJA/SECTION 2-2 sh./sc.1:50

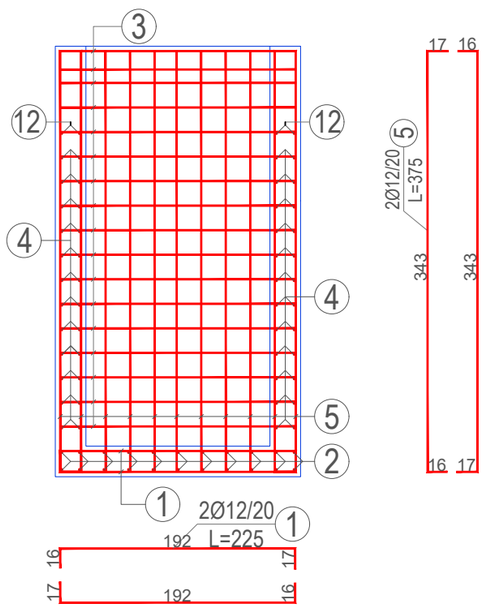

ELEMENTI		SPECIFIKIMI I ARMATURES					SPECIFIKIMET E ELEMANTIT			TOTAL (KG)
	cope	Poz	Φ	l (cm)	cope	L (m)	Φ	ΣLtot(m)	Pesha (per kg)	
Puseta 2.4 x 2 x 3.51	1	1	12	225	26	58.5	6	0	0.222	0
		2	12	265	22	58.3	8	311	0.395	123
		3	8	225	56	126	10	0	0.617	0
		4	8	265	48	127.2	12	358	0.888	317
		5	12	375	30	112.5	14	0	1.208	0
		6	8	70	24	16.8	16	0	1.578	0
		7	8	85	4	3.4	18	0	1.998	0
		8	12	315	28	88.2	20	0	2.466	0
		9	12	320	8	25.6	22	0	2.984	0
		10	12	103	14	14.42	24	0	3.551	0
		11	8	217	14	30.38	25	0	3.853	0
						0				
		12	8	180	4	7.2				
						0				
						0				
Beton C25/30									m3	6.7
Ø 6 - 10 mm									kg	123
Ø > 12 mm									kg	317

Shënime Teknike :
- Shtresa mbrojtëse është 4cm.
- Gjatësia minimale e mbivendosjes së shufrave është 50Ø.
- Klasa e betonit është C25/30.
- Klasa e çelikut është B500C, fyk = 500 MPa.
- Klasa e betonit të varfër është C12/15.

- Technical Notes:
- The layer protector is 4cm.
- Minimum overlap length of bars is 50Ø.
- The class of concrete is C25/30.
- Steel class is B500C, fyk = 500 MPa.
- The class of poor concrete is C12/15.

INVESTITORI / INVESTOR
"Autoriteti Rrugor Shqiptar"
Address: Rr. "Sami Frasheri", Nr 33, Tirane
Mob: 04 222 3600
E-mail: info@arrsh.gov.al

JV: "InfraKonsult" shpk & "HMK-Consulting" shpk

"Studim Projektim - Zgjerimi i segmentit rrugor dalje Elbasan-Prrenjas-Qafe Thane", (Faza II) / "Design Study of road segment exit Elbasan-Prrenjas-Qafe Thane" (Phase II)

Manhole reinfocement / Armimi i pusetes - Km 6+635.00

FAZA - PROJEKT ZBATIM
PHASE - DETAIL DESIGN

SHKALLA / SCALE 1:50
Data: Mars 2023
Date: March 2023
VIZATIMI Nr: / PAGE No: E (4)

PROJEKTUES: / DESIGN ENGINEERS:
Ing./Eng. Sokol METOJA
Ing./Eng. Redi STRUGA
Ing./Eng. Orgest MËRTIKA

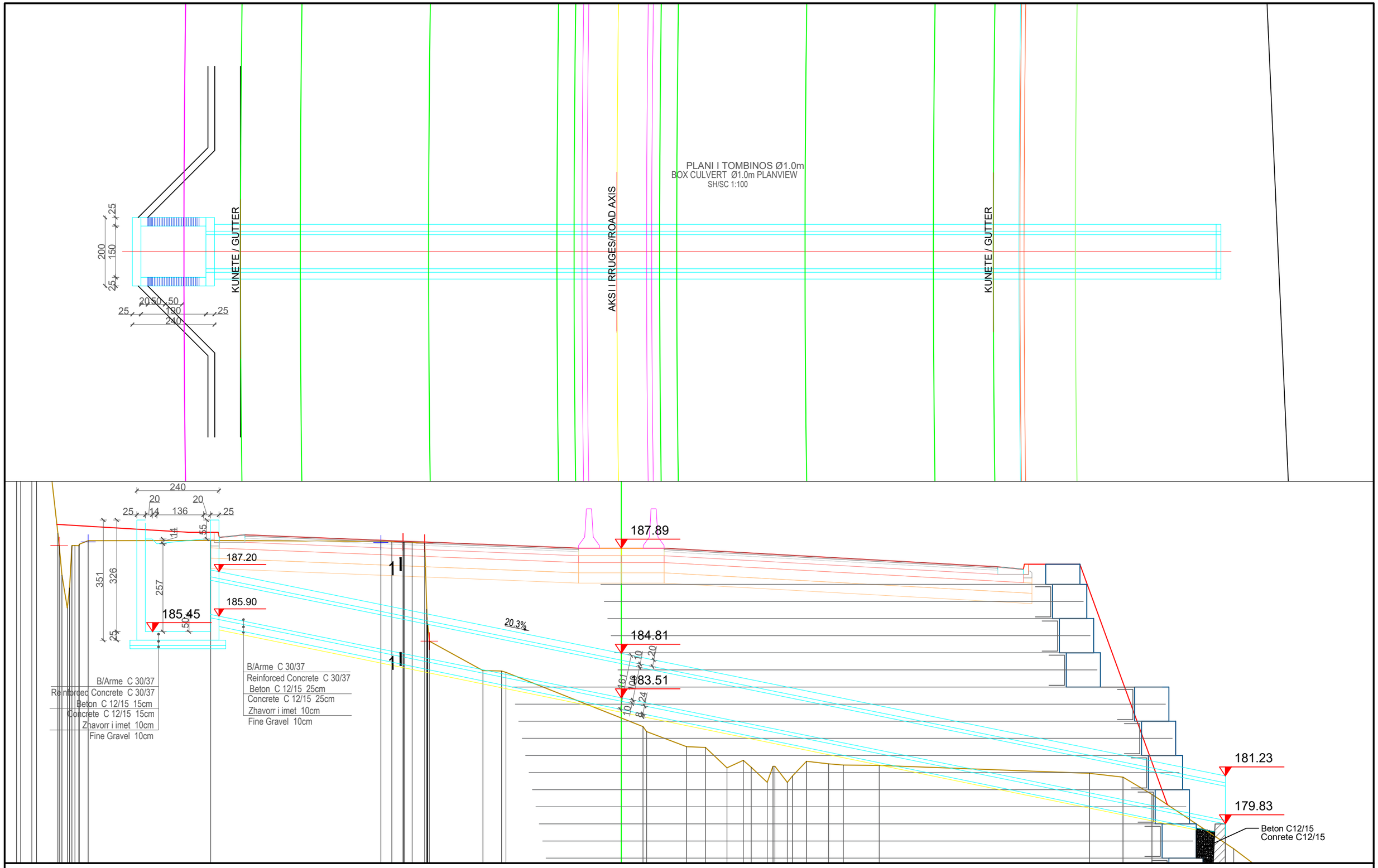

INVESTITORI / INVESTOR
"Autoriteti Rrugor Shqiptar"
Address: Rr. "Sami Frasheri", Nr 33, Tirane
Mob: 04 222 3600
E-mail: info@arrsh.gov.al

JV: "InfraKonsult" shpk & "HMK-Consulting" shpk

"Studim Projektim - Zgjerimi i segmentit rrugor dalje Elbasan-Prrenjas-Qafe Thane", (Faza II) / "Design Study of road segment exit Elbasan-Prrenjas-Qafe Thane" (Phase II)

Tombino Ø1000mm / Pipe Culvert Ø1000mm - Km 6+985

FAZA - PROJEKT ZBATIM
PHASE - DETAIL DESIGN

SHKALLA / SCALE	1:100 / 1:100	Data: Mars 2023 / Date: March 2023
VIZATIMI Nr: / PAGE No:	E (1)	

PROJEKTUES: / DESIGN ENGINEERS:
Ing./Eng. Sokol METOJA
Ing./Eng. Redi STRUGA
Ing./Eng. Orgest MËRTIKA

ARMIMI I TOMBINOS TUB D=100cm
TUBOLAR CULVERT REINFORCEMENT
SH.I:25

PRERJE TERTHORE
CROSS SECTION

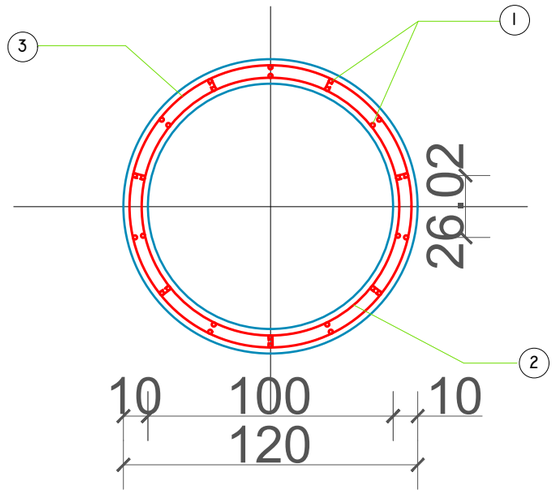

PRERJE GJATESORE
LONGITUDINAL SECTION

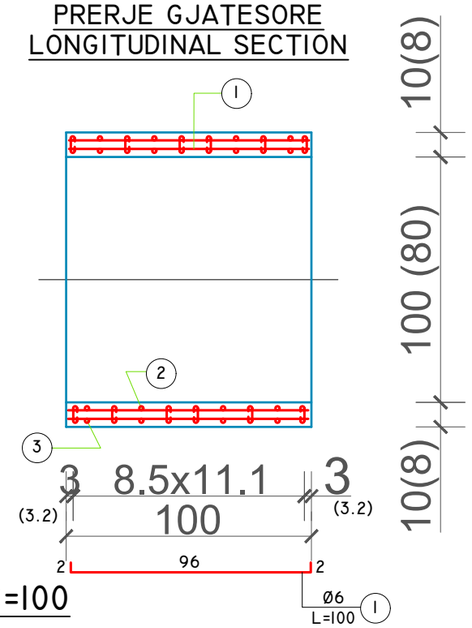

ARMATURA SPIRALE PER D=100

I JASHTEM
OUTSIDE SPIRAL

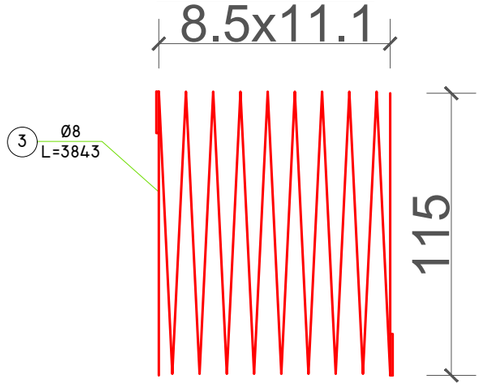

I BRENDSHEM
INSIDE SPIRAL

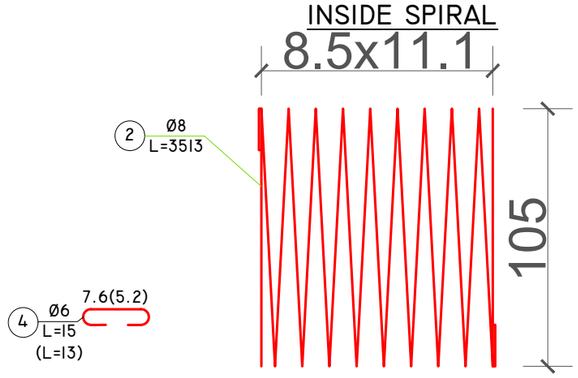

TABELA E HEKURIT/BAR SPECIFICATION

NR. POZ.	Ø mm	L cm	SASIA cope Quantity	L m	PERMBLEDHJE E ARMATURES			
					Ø mm	ΣL m	PESHA kg/ml weight	PESHA kg Weight
1	6	100	28	28.0	6	34.30	0.222	7.61
2	8	3513	1	35.13	8	76.60	0.395	29.06
3	8	3843	1	38.43				
4	6	15	42	6.30				
HEKURI PERIODIK PER NJE TUB/REBAR WEIGHT FOR 1 PRECASTED CULVERT							kg	36.67
HEKURI PERIODIK PER 31 TUBA/REBAR WEIGHT FOR 31 PRECASTED CULVERTS							kg	1136.77
TOMBINO E PARAPERGATITUR/PRECASTED TUBOLAR CULVERT							COPE	31

SHENIM

1. TUBAT REALIZOHEN ME B/ARME C30/37 DHE CELIK PERIODIK Feb 44K DHE [δ]=26kg/mm ².
2. TUBAT JANE PARASHIKUAR PER LARTESI MBUSHJE MBI H=4.0m.

INVESTITORI / INVESTOR
"Autoriteti Rrugor Shqiptar"
Address: Rr. "Sami Frasheri", Nr 33, Tirane
Mob: 04 222 3600
E-mail: info@arrsh.gov.al

JV: "InfraKonsult" shpk & "HMK-Consulting" shpk

"Studim Projektim - Zgjerimi i segmentit rrugor dalje Elbasan-Prrenjas-Qafe Thane", (Faza II) / "Design Study of road segment exit Elbasan-Prrenjas-Qafe Thane" (Phase II)

Armimi i Tombino Ø1000mm / Pipe Culvert Ø1000mm Reinforcement - Km 6+985

FAZA - PROJEKT ZBATIM
PHASE - DETAIL DESIGN

SHKALLA SCALE	1:25	Data: Mars 2023 Date: March 2023
VIZATIMI PAGE	Nr: No:	E (2)

PROJEKTUES: DESIGN ENGINEERS:
Ing./Eng. Sokol METOJA
Ing./Eng. Redi STRUGA
Ing./Eng. Orgest MËRTIKA

PRERJE E PUSETES/ MANHOLE SECTION sh./sc.1:50

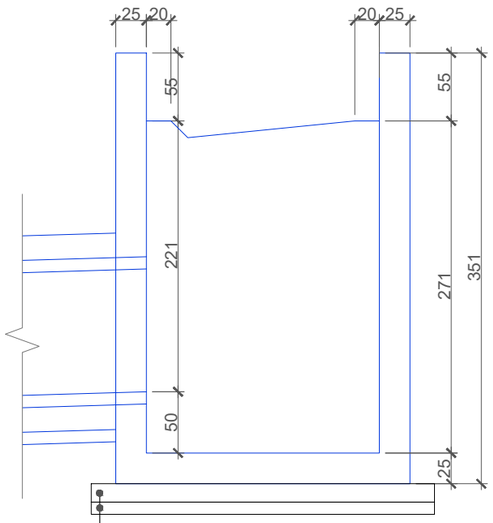

Beton/Lean concrete C 12/15 (15 cm)

Shtrese zhavori/Gravel layer (10 cm)

PLANIMETRI E PUSETES/MANHOLE PLANVIEW sh./sc.1:50

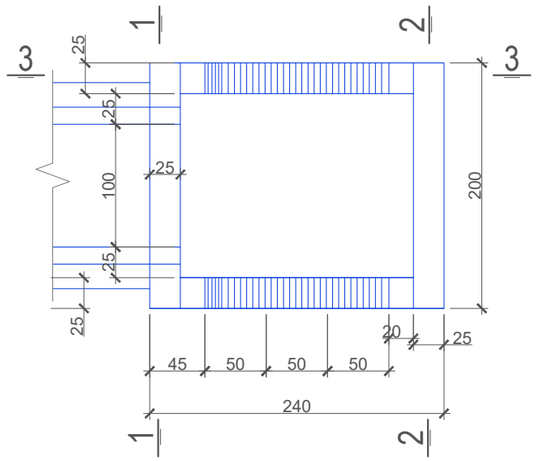

PRERJA/SECTION 1-1 sh./sc.1:50

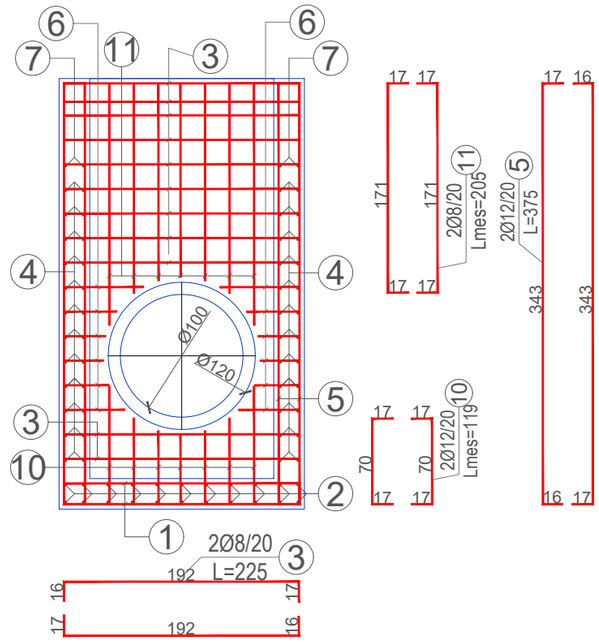

PRERJA/SECTION 2-2 sh./sc.1:50

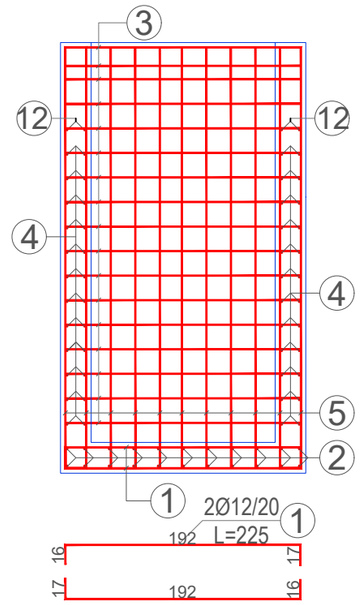

PRERJA/SECTION 3-3 sh./sc.1:50

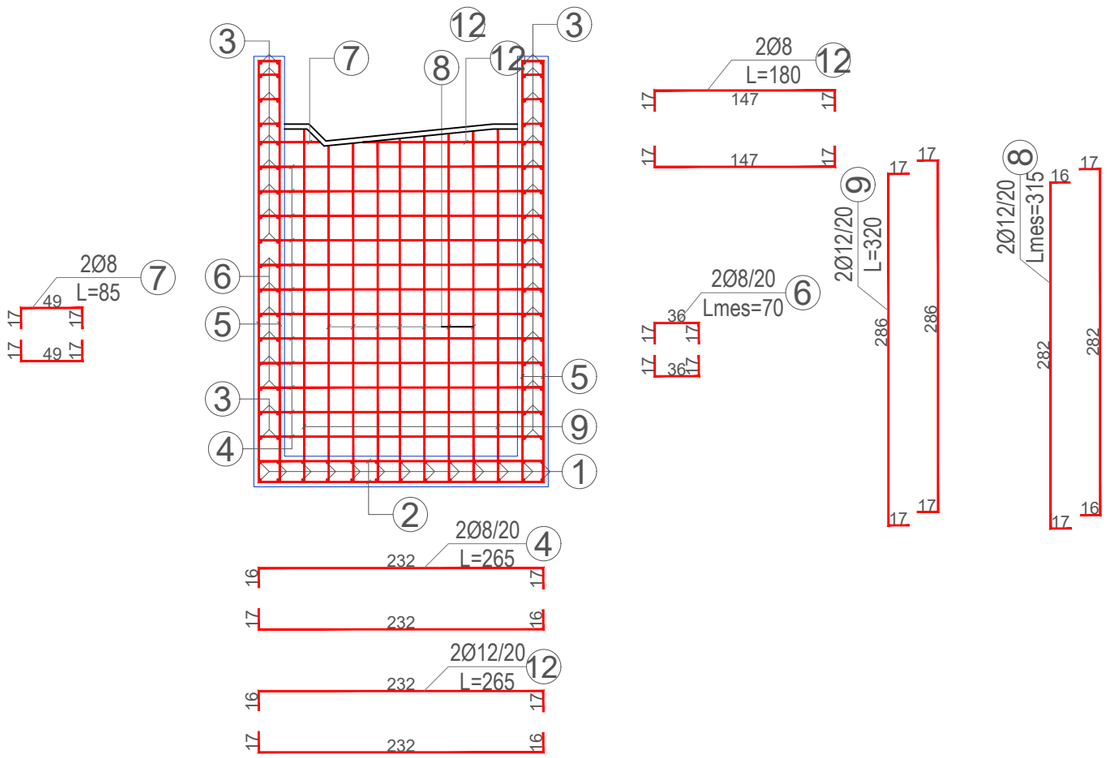

ELEMENTI		SPECIFIKIMI I ARMATURES					SPECIFIKIMET E ELEMANTIT			TOTAL (KG)
	cope	Poz	Φ	l (cm)	cope	L (m)	Φ	ΣLtot(m)	Pesha (per kg)	
Armimi i pusetes	1	1	12	225	26	58.5	6	0	0.222	0
		2	12	265	22	58.3	8	311	0.395	123
		3	8	225	56	126	10	0	0.617	0
		4	8	265	48	127.2	12	358	0.888	317
		5	12	375	30	112.5	14	0	1.208	0
		6	8	70	24	16.8	16	0	1.578	0
		7	8	85	4	3.4	18	0	1.998	0
		8	12	315	28	88.2	20	0	2.466	0
		9	12	320	8	25.6	22	0	2.984	0
		10	12	103	14	14.42	24	0	3.551	0
		11	8	217	14	30.38	25	0	3.853	0
						0				
		12	8	180	4	7.2				
						0				
						0				
Beton C25/30									m3	6.7
Ø 6 - 10 mm									kg	123
Ø > 12 mm									kg	317

Shënime Teknike :
- Shtresa mbrojtëse është 4cm.
- Gjatësia minimale e mbivendosjes së shufrave është 50Ø.
- Klasa e betonit është C25/30.
- Klasa e çelikut është B500C, fyk = 500 MPa.
- Klasa e betonit të varfër është C12/15.

- Technical Notes:
- The layer protector is 4cm.
- Minimum overlap length of bars is 50Ø.
- The class of concrete is C25/30.
- Steel class is B500C, fyk = 500 MPa.
- The class of poor concrete is C12/15.

INVESTITORI / INVESTOR
"Autoriteti Rrugor Shqiptar"
Address: Rr. "Sami Frasheri", Nr 33, Tirane
Mob: 04 222 3600
E-mail: info@arrsh.gov.al

JV: "InfraKonsult" shpk & "HMK-Consulting" shpk

"Studim Projektim - Zgjerimi i segmentit rrugor dalje Elbasan-Prrenjas-Qafe Thane", (Faza II) / "Design Study of road segment exit Elbasan-Prrenjas-Qafe Thane" (Phase II)

Armimi i pusetes se Tombinos Ø1000mm / Pipe Culvert Ø1000mm Manhole Reinforcement - Km 6+985

FAZA - PROJEKT ZBATIM
PHASE - DETAIL DESIGN

SHKALLA / SCALE 1:50

Data: Mars 2023
Date:March 2023

VIZATIMI Nr: / PAGE No: E (3)

PROJEKTUES: / DESIGN ENGINEERS:
Ing./Eng. Sokol METOJA
Ing./Eng. Redi STRUGA
Ing./Eng. Orgest MËRTIKA

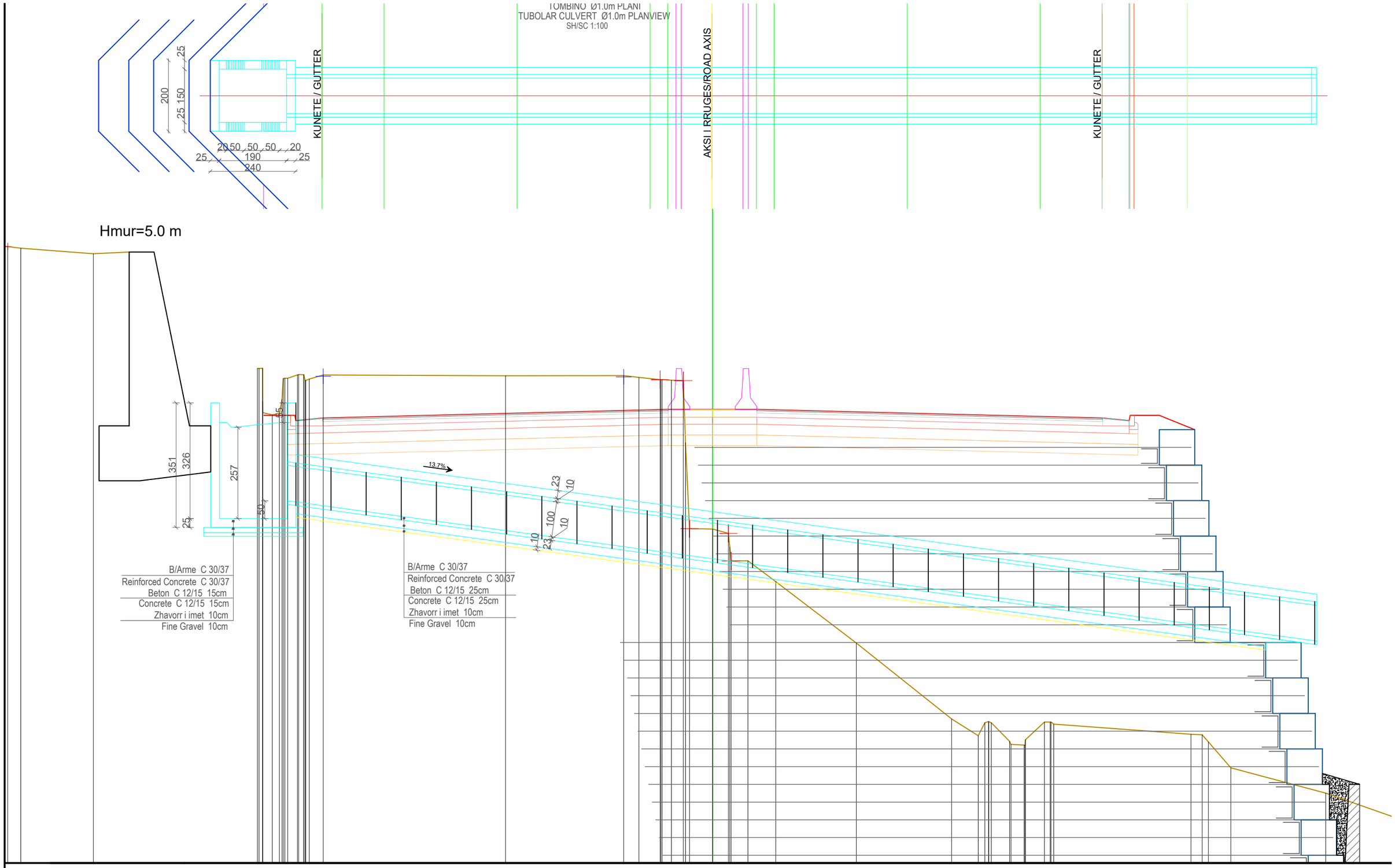

INVESTITORI / INVESTOR

"Autoriteti Rrugor Shqiptar"

Address: Rr. "Sami Frasheri", Nr 33, Tirane

Mob: 04 222 3600
E-mail: info@arrsh.gov.al

JV: "InfraKonsult" shpk & "HMK-Consulting" shpk

"Studim Projektim - Zgjerimi i segmentit rrugor dalje Elbasan-Prrenjas-Qafe Thane", (Faza II) / "Design Study of road segment exit Elbasan-Prrenjas-Qafe Thane" (Phase II)

Tombino Ø1000mm / Pipe Culvert Ø1000mm - Km 6+985

FAZA - PROJEKT ZBATIM
PHASE - DETAIL DESIGN

SHKALLA / SCALE	1:100 / 1:100	Data: Mars 2023 / Date: March 2023
VIZATIMI Nr: / PAGE No:	E (1)	

PROJEKTUES: / DESIGN ENGINEERS:
Ing./Eng. Sokol METOJA
Ing./Eng. Redi STRUGA
Ing./Eng. Orgest MËRTIKA

ARMIMI I TOMBINOS TUB D=100cm
TUBOLAR CULVERT REINFORCEMENT
SH.1:25

PRERJE TERTHORE
CROSS SECTION

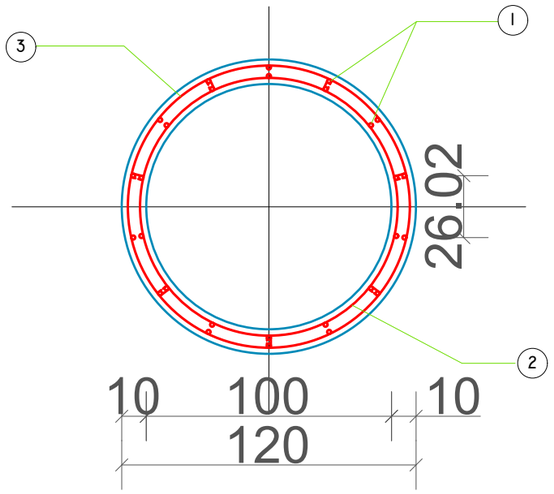

PRERJE GJATESORE
LONGITUDINAL SECTION

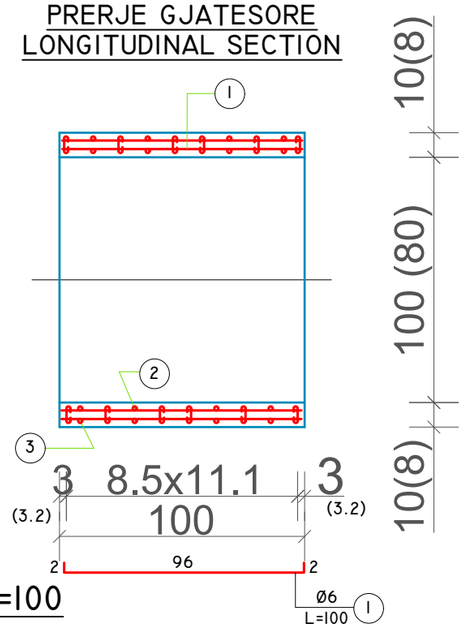

ARMATURA SPIRALE PER D=100

I JASHTEM
OUTSIDE SPIRAL

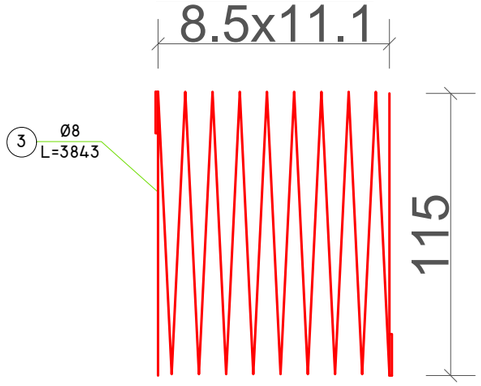

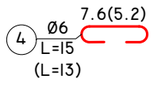

I BRENDSHEM
INSIDE SPIRAL

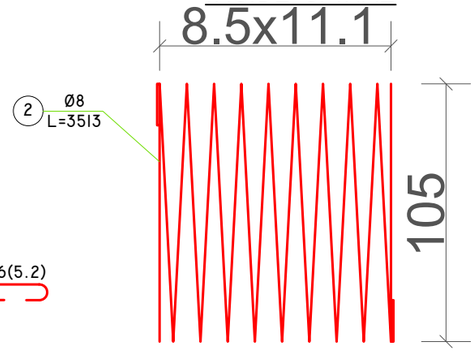

TABELA E HEKURIT/BAR SPECIFICATION

NR. POZ.	Ø mm	L cm	SASIA cope Quantity	L m	PERMBLEDHJE E ARMATURES			
					Ø mm	ΣL m	PESHA kg/ml weight	PESHA kg Weight
1	6	100	28	28.0	6	34.30	0.222	7.61
2	8	3513	1	35.13	8	76.60	0.395	29.06
3	8	3843	1	38.43				
4	6	15	42	6.30				
HEKURI PERIODIK PER NJE TUB/REBAR WEIGHT FOR 1 PRECASTED CULVERT							kg	36.67
HEKURI PERIODIK PER 31 TUBA/REBAR WEIGHT FOR 31 PRECASTED CULVERTS							kg	1136.77
TOMBINO E PARAPERGATITUR/PRECASTED TUBOLAR CULVERT							COPE	31

SHENIM

1. TUBAT REALIZOHEN ME B/ARME C30/37 DHE CELIK PERIODIK B500C, FYK=500MPA.
2. TUBAT JANE PARASHIKUAR PER LARTESI MBUSHJE MBI H=4.0m.

NOTE

1. PIPES ARE MADE WITH C30/37 CONCRETE AND PERIODIC STEEL B500C, FYK=500MPA.
2. THE PIPES ARE DESIGNED FOR A FILLING HEIGHT ABOVE H=4.0M.

INVESTITORI / INVESTOR
"Autoriteti Rrugor Shqiptar"
Address: Rr. "Sami Frasheri", Nr 33, Tirane
Mob: 04 222 3600
E-mail: info@arrsh.gov.al

JV: "InfraKonsult" shpk & "HMK-Consulting" shpk

"Studim Projektim - Zgjerimi i segmentit rrugor dalje Elbasan-Prrenjas-Qafe Thane", (Faza II) / "Design Study of road segment exit Elbasan-Prrenjas-Qafe Thane" (Phase II)

Armimi i Tombinos Ø1000mm / Pipe Culvert Ø1000mm Reinforcement - Km 6+985

FAZA - PROJEKT ZBATIM
PHASE - DETAIL DESIGN

SHKALLA / SCALE 1:25
Data: Mars 2023
Date: March 2023

VIZATIMI Nr: / PAGE No: E (2)

PROJEKTUES: / DESIGN ENGINEERS:
Ing./Eng. Sokol METOJA
Ing./Eng. Redi STRUGA
Ing./Eng. Orgest MËRTIKA

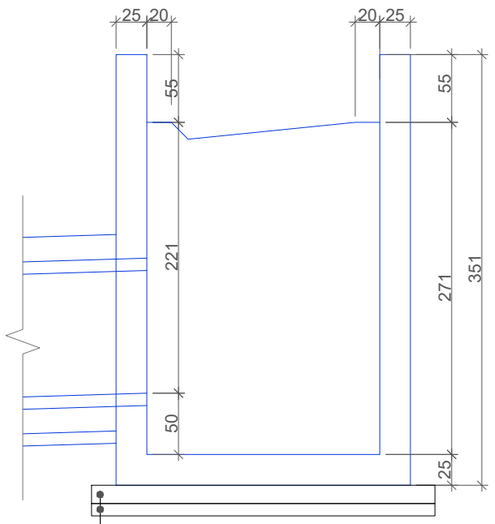

Beton/Lean concrete C 12/15 (15 cm)

Shtrese zhavori/Gravel layer (10 cm)

PLANIMETRI E PUSETES/MANHOLE PLANVIEW
sh./sc.1:50

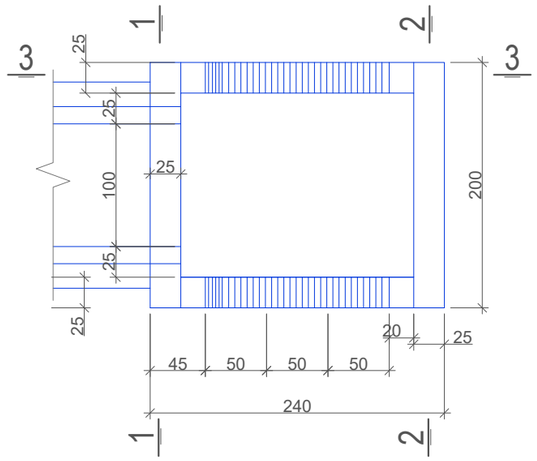

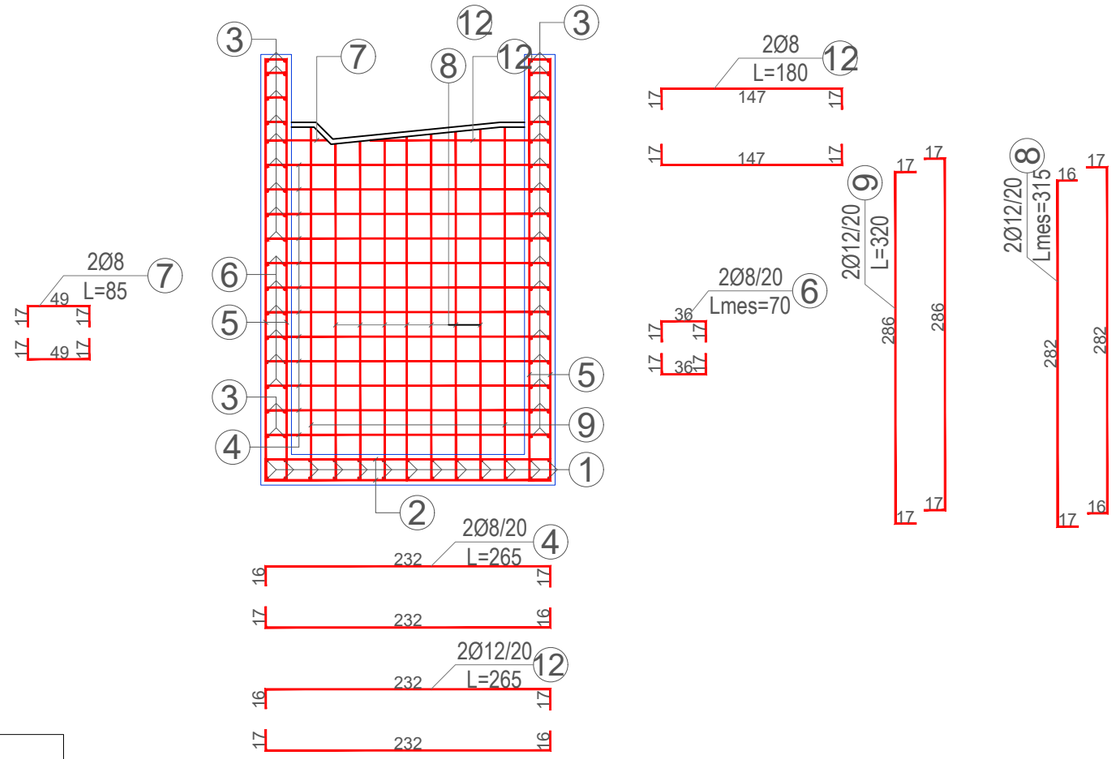

PRERJA/SECTION 1-1 sh./sc.1:50

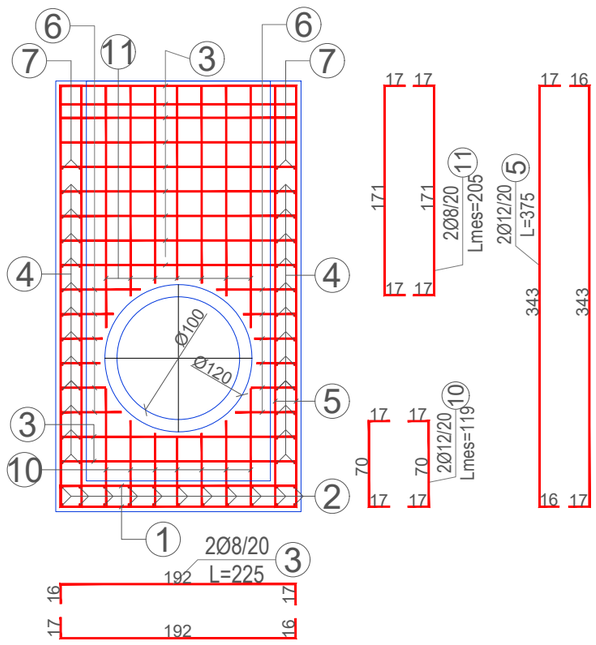

PRERJA/SECTION 2-2 sh./sc.1:50

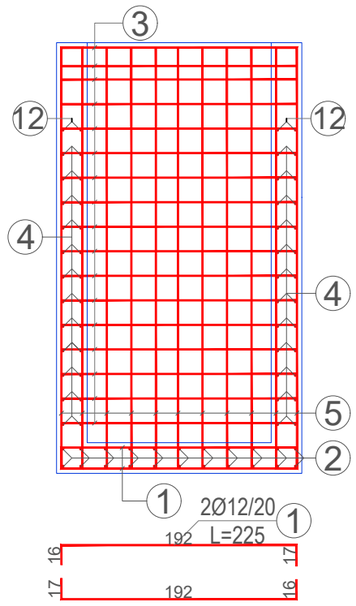

ELEMENTI		SPECIFIKIMI I ARMATURES					SPECIFIKIMET E ELEMANTIT			TOTAL (KG)
	cope	Poz	Φ	l (cm)	cope	L (m)	Φ	ΣLtot(m)	Pesha (per kg)	
Puseta 1 & 5 & 7	1	1	12	225	26	58.5	6	0	0.222	0
		2	12	265	22	58.3	8	311	0.395	123
		3	8	225	56	126	10	0	0.617	0
		4	8	265	48	127.2	12	358	0.888	317
		5	12	375	30	112.5	14	0	1.208	0
		6	8	70	24	16.8	16	0	1.578	0
		7	8	85	4	3.4	18	0	1.998	0
		8	12	315	28	88.2	20	0	2.466	0
		9	12	320	8	25.6	22	0	2.984	0
		10	12	103	14	14.42	24	0	3.551	0
		11	8	217	14	30.38	25	0	3.853	0
						0				
		12	8	180	4	7.2				
						0				
						0				
Beton C25/30									m3	6.7
Ø 6 - 10 mm									kg	123
Ø > 12 mm									kg	317

Shënime Teknike :
- Shtresa mbrojtëse është 4cm.
- Gjatësia minimale e mbivendosjes së shufrave është 50Ø.
- Klasa e betonit është C25/30.
- Klasa e çelikut është B500C, fyk = 500 MPa.
- Klasa e betonit të varfër është C12/15.

- Technical Notes:
- The layer protector is 4cm.
- Minimum overlap length of bars is 50Ø.
- The class of concrete is C25/30.
- Steel class is B500C, fyk = 500 MPa.
- The class of poor concrete is C12/15.

INVESTITORI / INVESTOR
"Autoriteti Rrugor Shqiptar"
Address: Rr. "Sami Frasheri", Nr 33, Tirane
Mob: 04 222 3600
E-mail: info@arrsh.gov.al

JV: "InfraKonsult" shpk & "HMK-Consulting" shpk

"Studim Projektim - Zgjerimi i segmentit rrugor dalje Elbasan-Prrenjas-Qafe Thane", (Faza II) / "Design Study of road segment exit Elbasan-Prrenjas-Qafe Thane" (Phase II)

Armimi i pusetes/ Manhole reinforcement - Km 6+985

FAZA - PROJEKT ZBATIM
PHASE - DETAIL DESIGN

SHKALLA / SCALE 1:50
Data: Mars 2023 / Date: March 2023
VIZATIMI Nr: / PAGE No: E (3)

PROJEKTUES: / DESIGN ENGINEERS:
Ing./Eng. Sokol METOJA
Ing./Eng. Redi STRUGA
Ing./Eng. Orgest MËRTIKA

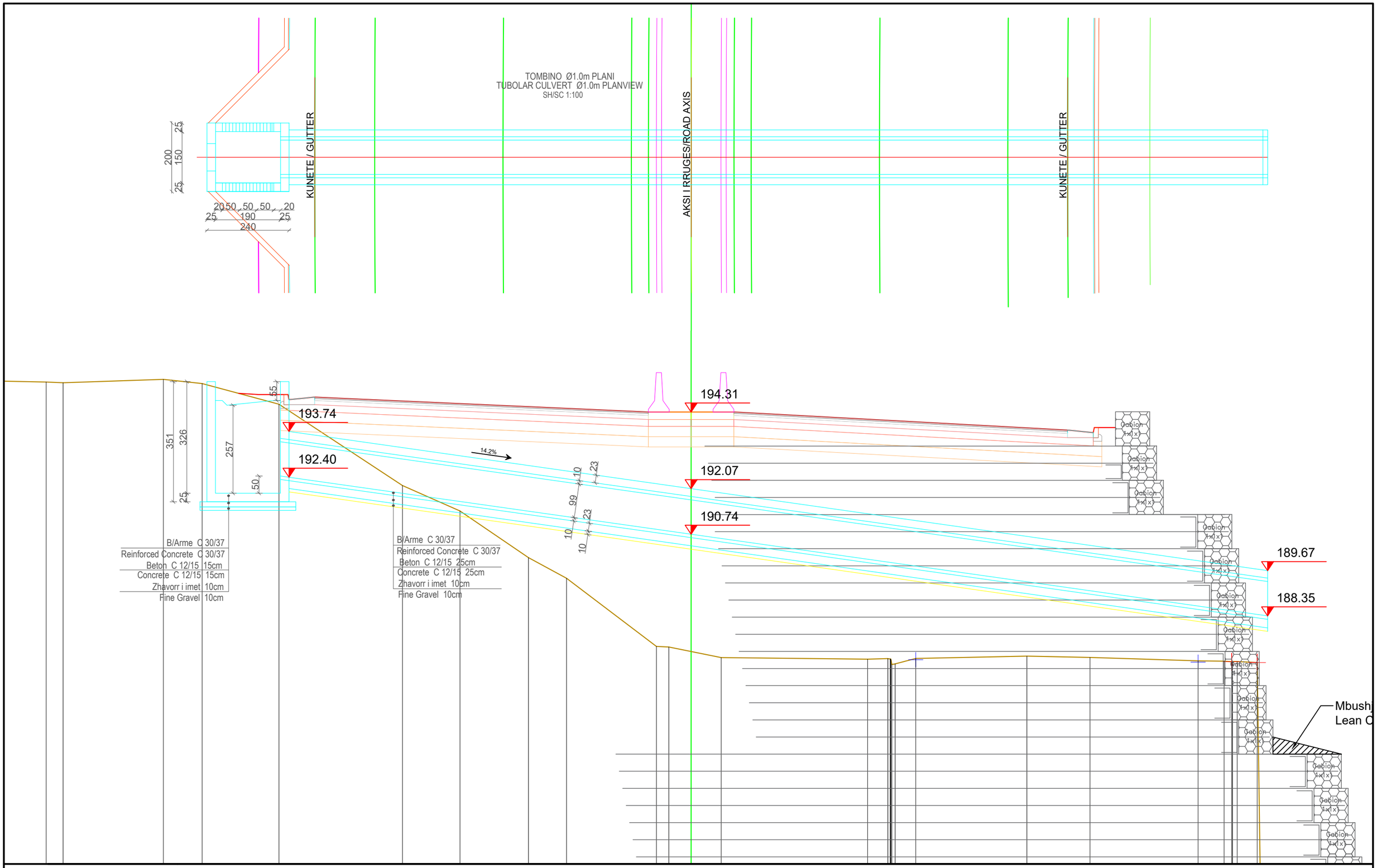

INVESTITORI / INVESTOR

"Autoriteti Rrugor Shqiptar"

Address: Rr. "Sami Frasheri", Nr 33, Tirane

Mob: 04 222 3600
E-mail: info@arrsh.gov.al

JV: "InfraKonsult" shpk & "HMK-Consulting" shpk

"Studim Projektim - Zgjerimi i segmentit rrugor dalje Elbasan-Prrenjas-Qafe Thane", (Faza II) / "Design Study of road segment exit Elbasan-Prrenjas-Qafe Thane" (Phase II)

Tombino Ø1000mm / Pipe Culvert Ø1000mm- Km 7+240

FAZA - PROJEKT ZBATIM
PHASE - DETAIL DESIGN

SHKALLA / SCALE	1:100	Data: Mars 2023 / Date: March 2023
VIZATIMI Nr: / PAGE No:	E (1)	

PROJEKTUES:
DESIGN ENGINEERS:

Ing./Eng. Sokol METOJA
Ing./Eng. Redi STRUGA
Ing./Eng. Orgest MËRTIKA

ARMIMI I TOMBINOS TUB D=100cm
TUBOLAR CULVERT REINFORCEMENT
SH.1:25

PRERJE TERTHORE
CROSS SECTION

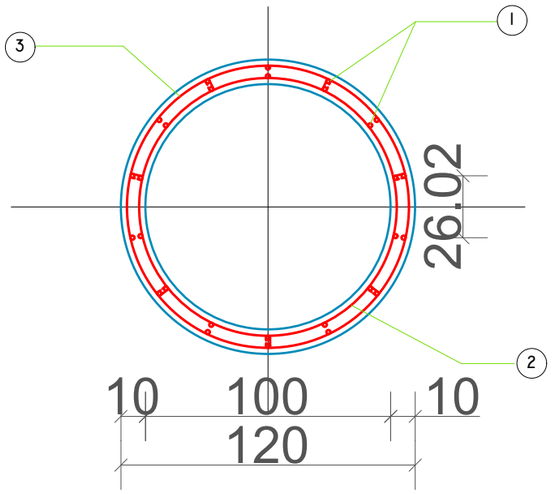

PRERJE GJATESORE
LONGITUDINAL SECTION

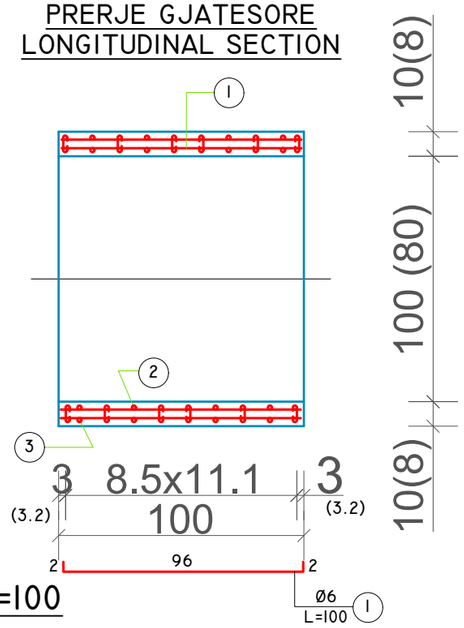

ARMATURA SPIRALE PER D=100

I JASHTEM
OUTSIDE SPIRAL

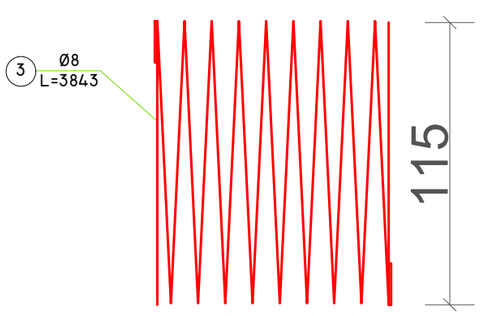

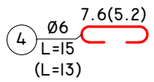

I BRENDSHEM
INSIDE SPIRAL

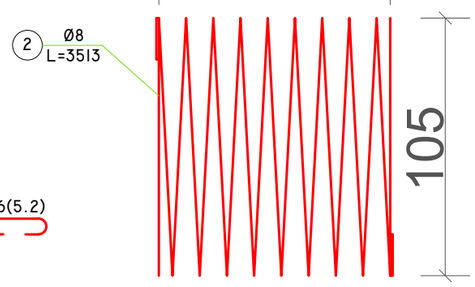

TABELA E HEKURIT/BAR SPECIFICATION

NR. POZ.	Ø mm	L cm	SASIA cope Quantity	L m	PERMBLEDHJE E ARMATURES			
					Ø mm	ΣL m	PESHA kg/ml weight	PESHA kg Weight
1	6	100	28	28.0	6	34.30	0.222	7.61
2	8	3513	1	35.13	8	76.60	0.395	29.06
3	8	3843	1	38.43				
4	6	15	42	6.30				
HEKURI PERIODIK PER NJE TUB/REBAR WEIGHT FOR 1 PRECASTED CULVERT							kg	36.67
HEKURI PERIODIK PER 30 TUBA/REBAR WEIGHT FOR 30 PRECASTED CULVERTS							kg	1100.1
TOMBINO E PARAPERGATITUR/PRECASTED TUBOLAR CULVERT							COPE	30

SHENIM

1. TUBAT REALIZOHEN ME B/ARME C30/37 DHE CELIK PERIODIK B500C, FYK=500MPA.
2. TUBAT JANE PARASHIKUAR PER LARTESI MBUSHJE MBI H=4.0m.

NOTE

1. PIPES ARE MADE WITH C30/37 CONCRETE AND PERIODIC STEEL B500C, FYK=500MPA.
2. THE PIPES ARE DESIGNED FOR A FILLING HEIGHT ABOVE H=4.0M.

INVESTITORI / INVESTOR
"Autoriteti Rrugor Shqiptar"
Address: Rr. "Sami Frasheri", Nr 33, Tirane
Mob: 04 222 3600
E-mail: info@arrsh.gov.al

JV: "InfraKonsult" shpk & "HMK-Consulting" shpk

"Studim Projektim - Zgjerimi i segmentit rrugor dalje Elbasan-Prrenjas-Qafe Thane", (Faza II) / "Design Study of road segment exit Elbasan-Prrenjas-Qafe Thane" (Phase II)

Armimi i Tombino Ø1000mm / Pipe Culvert Ø1000mm Reinforcement- Km 7+240.00

FAZA - PROJEKT ZBATIM
PHASE - DETAIL DESIGN

SHKALLA / SCALE	1:25	Data: Mars 2023 / Date: March 2023
VIZATIMI Nr: / PAGE No:	E (2)	

PROJEKTUES: / DESIGN ENGINEERS:
Ing./Eng. Sokol METOJA
Ing./Eng. Redi STRUGA
Ing./Eng. Orgest MËRTIKA

PRERJE E PUSETES/ MANHOLE SECTION sh./sc.1:50

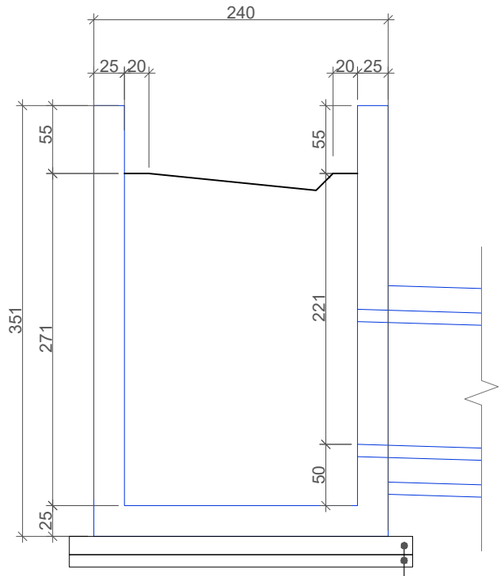

Beton/Lean concrete C 12/15 (15 cm)

Shtrese zhavori/Gravel layer (10 cm)

PLANIMETRI E PUSETES/MANHOLE PLANVIEW sh./sc.1:50

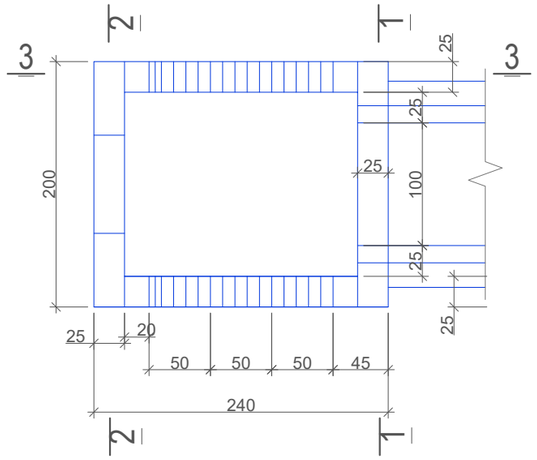

PRERJA/SECTION 3-3 sh./sc.1:50

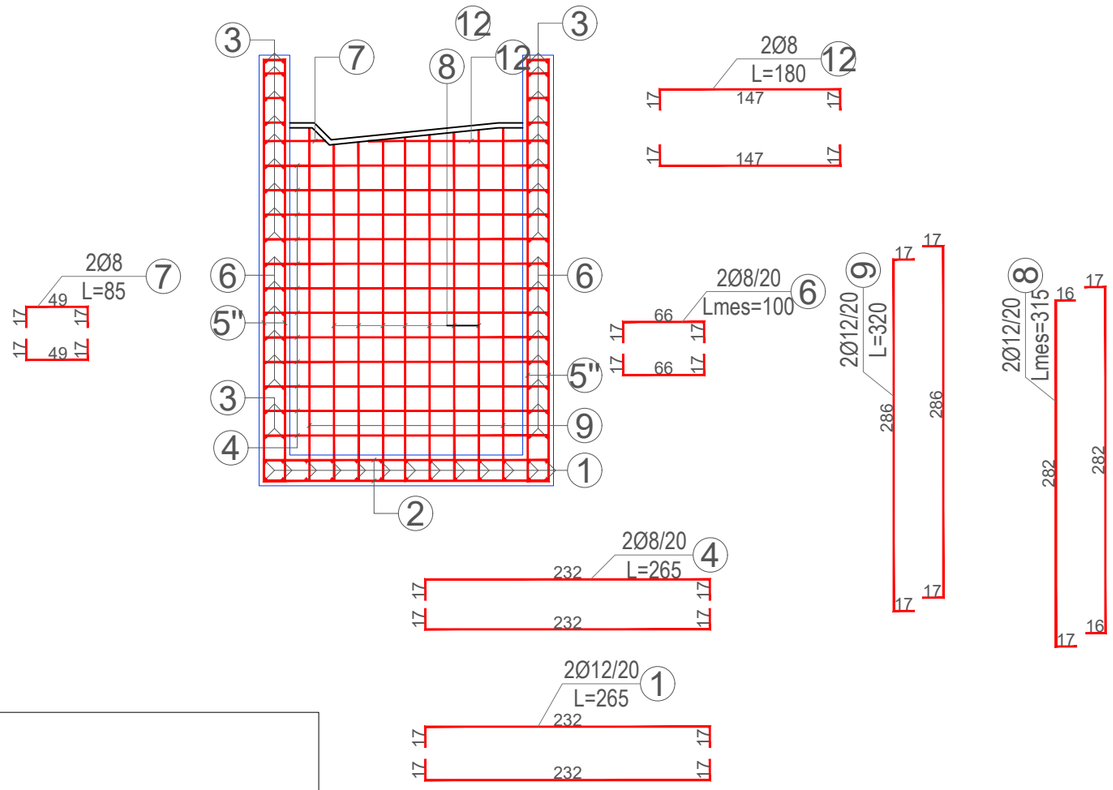

PRERJA/SECTION 1-1 sh./sc.1:50

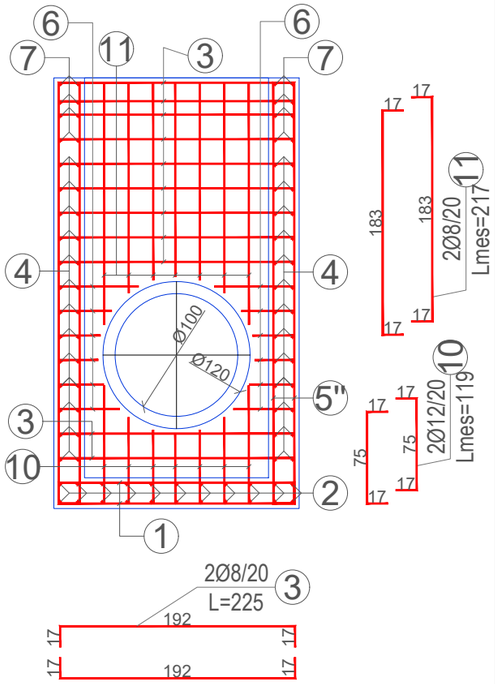

PRERJA/SECTION 2-2 sh./sc.1:50

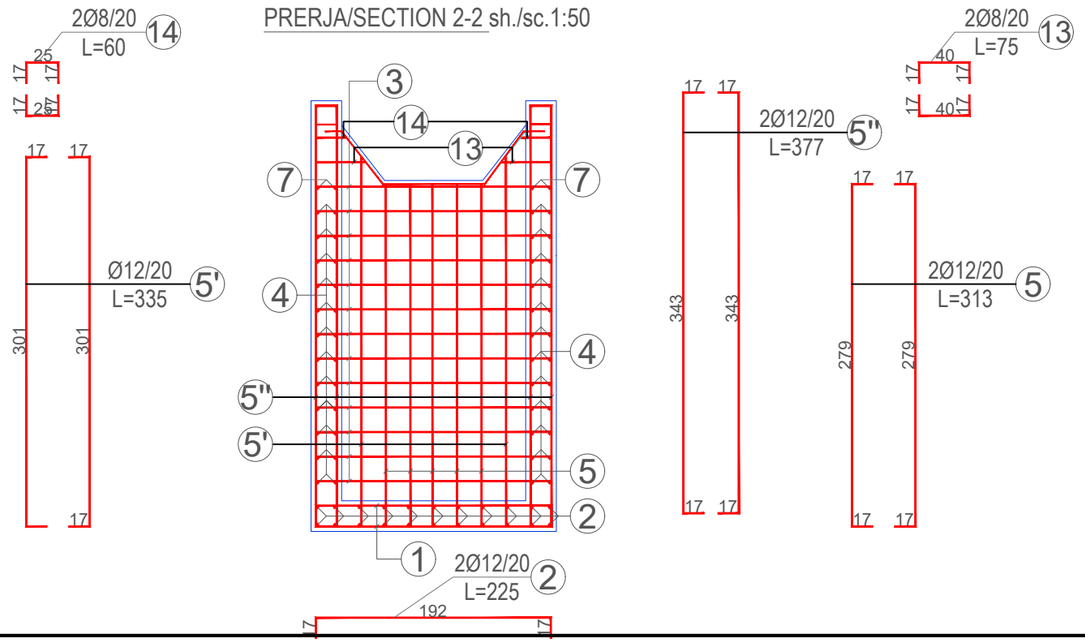

ELEMENTI		SPECIFIKIMI I ARMATURES					SPECIFIKIMET E ELEMANTIT			TOTAL (KG)
	cope	Poz	Φ	l (cm)	cope	L (m)	Φ	ΣLtot(m)	Pesha (per kg)	
Puseta 2.4x2m	1	1	12	265	26	68.9	6	0	0.222	0
		2	12	225	22	49.5	8	301	0.395	119
		3	8	225	46	103.5	10	0	0.617	0
		4	8	265	48	127.2	12	354	0.888	314
		5	12	313	10	31.3	14	0	1.208	0
		5'	12	335	4	13.4	16	0	1.578	0
		5''	12	377	16	60.32	18	0	1.998	0
		6	8	100	24	88.2	20	0	2.466	0
		7	8	85	2	25.6	22	0	2.984	0
		8	12	315	28	16.66	24	0	3.551	0
		9	12	320	8	30.38	25	0	3.853	0
		10	12	119	14	16.66				
		11	8	217	14	30.38				
		12	8	180	4	7.2				
		13	8	75	2	1.5				
		14	8	60	2	1.2				
		15	8	225	2	4.5				
Beton C25/30									m3	5.5
Ø 6 - 10 mm									kg	119
Ø > 12 mm									kg	314

Shënime Teknike :
- Shtresa mbrojtëse është 4cm.
- Gjatësia minimale e mbivendosjes së shufrave është 50Ø.
- Klasa e betonit është C25/30.
- Klasa e çelikut është B450, fyk = 500 MPa.
- Klasa e betonit të varfër është C12/15.

- Technical Notes:
- The layer protector is 4cm.
- Minimum overlap length of bars is 50Ø.
- The class of concrete is C25/30.
- Steel class is B450, fyk = 500 MPa.
- The class of poor concrete is C12/15.

INVESTITORI / INVESTOR
"Autoriteti Rrugor Shqiptar"
Address: Rr. "Sami Frasheri", Nr 33, Tirane
Mob: 04 222 3600
E-mail: info@arrsh.gov.al

JV: "InfraKonsult" shpk & "HMK-Consulting" shpk

"Studim Projektim - Zgjerimi i segmentit rrugor dalje Elbasan-Prrenjas-Qafe Thane", (Faza II) / "Design Study of road segment exit Elbasan-Prrenjas-Qafe Thane" (Phase II)

Armimi i pusetes / Manhole Reinforcement- Km 7+240.00

FAZA - PROJEKT ZBATIM
PHASE - DETAIL DESIGN

SHKALLA / SCALE 1:50

Data: Mars 2023
Date: March 2023

VIZATIMI Nr: / PAGE No: E (3)

PROJEKTUES: / DESIGN ENGINEERS:
Ing./Eng. Sokol METOJA
Ing./Eng. Redi STRUGA
Ing./Eng. Orgest MËRTIKA

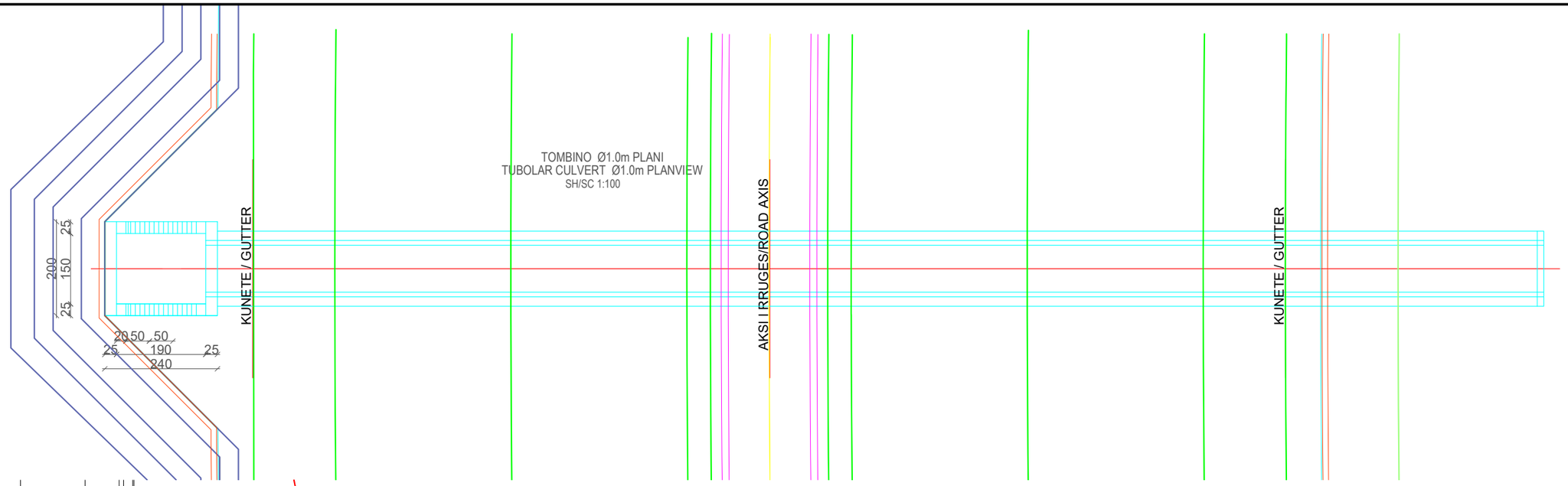

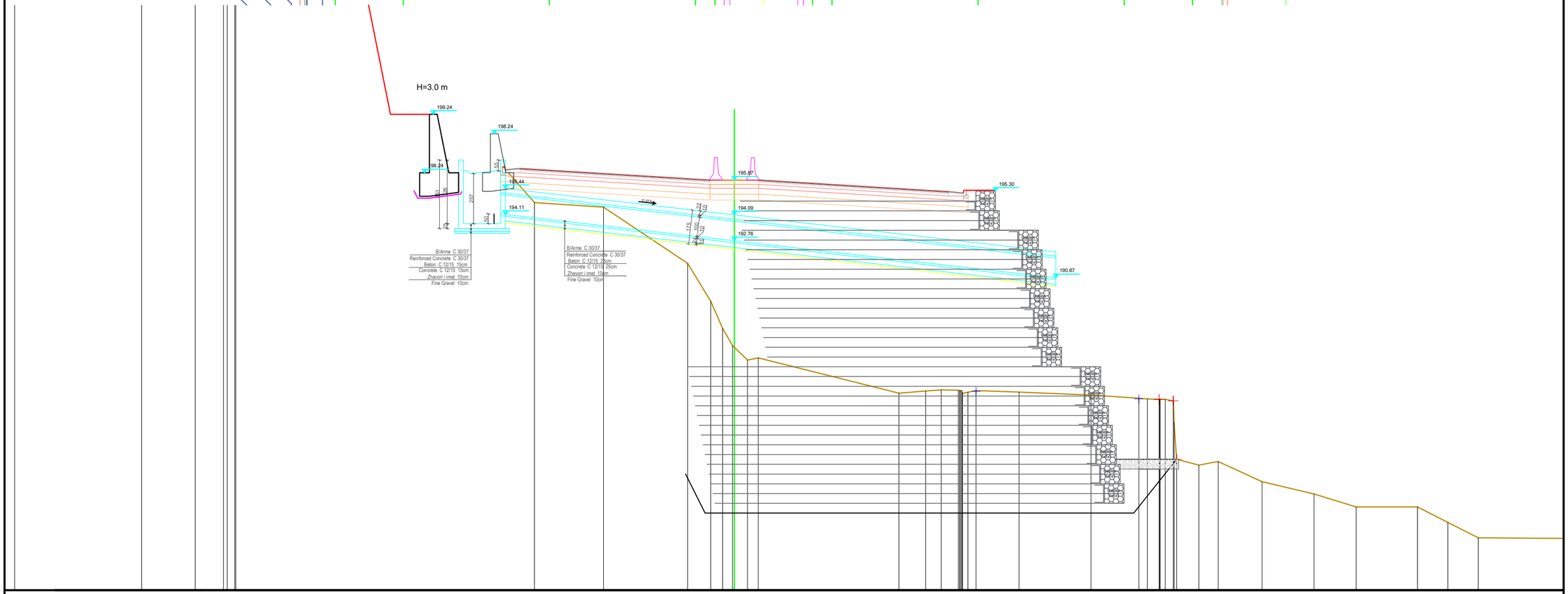

INVESTITORI / INVESTOR
"Autoriteti Rrugor Shqiptar"

Address: Rr. "Sami Frasheri", Nr 33, Tirane
Mob: 04 222 3600
E-mail: info@arrsh.gov.al

JV: "InfraKonsult" shpk & "HMK-Consulting" shpk

"Studim Projektim - Zgjerimi i segmentit rrugor dalje Elbasan-Prrenjas-Qafe Thane", (Faza II) / "Design Study of road segment exit Elbasan-Prrenjas-Qafe Thane" (Phase II)

Tombino Ø1000mm / Pipe Culvert Ø1000mm- Km 7+302.00

FAZA - PROJEKT ZBATIM
PHASE - DETAIL DESIGN

SHKALLA / SCALE	1:100 / 1:200	Data: Mars 2023 / Date: March 2023
VIZATIMI Nr: / PAGE No:	E (1)	

PROJEKTUES: / DESIGN ENGINEERS:
Ing./Eng. Sokol METOJA
Ing./Eng. Redi STRUGA
Ing./Eng. Orgest MËRTIKA

ARMIMI I TOMBINOS TUB D=100cm
TUBOLAR CULVERT REINFORCEMENT
SH.1:25

PRERJE TERTHORE
CROSS SECTION

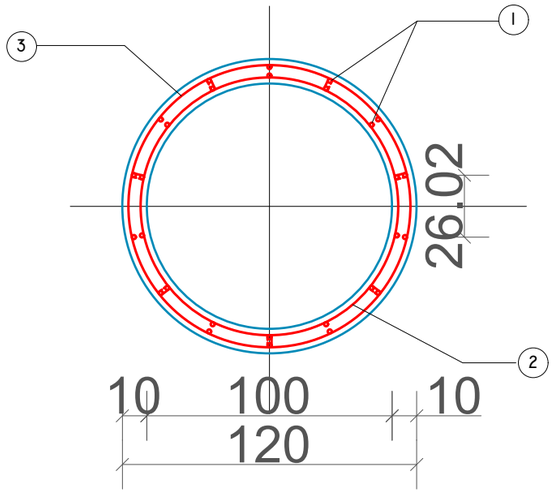

PRERJE GJATESORE
LONGITUDINAL SECTION

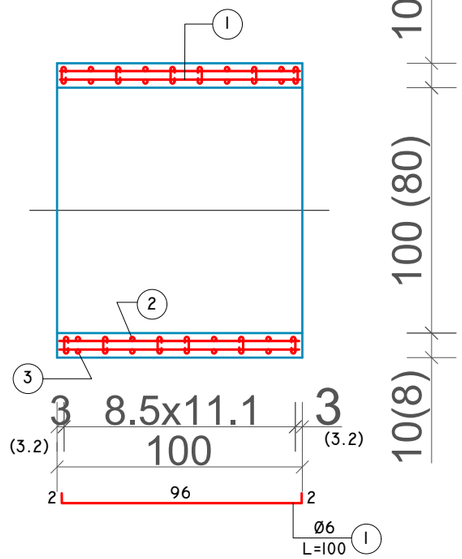

I JASHTEM
OUTSIDE SPIRAL

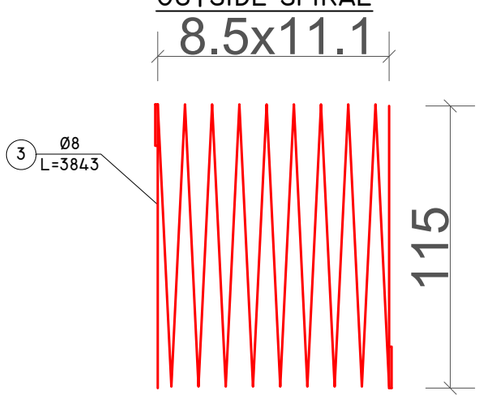

I BRENDSHEM
INSIDE SPIRAL

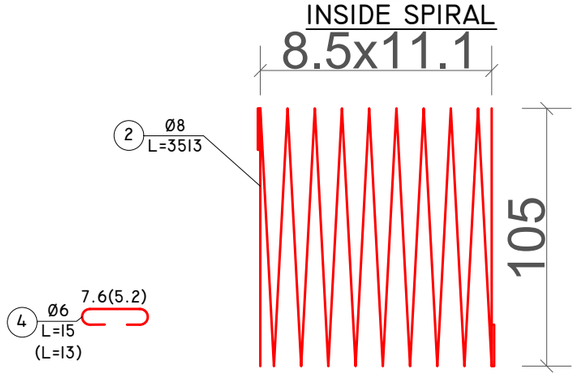

TABELA E HEKURIT/BAR SPECIFICATION

NR. POZ.	Ø mm	L cm	SASIA cope Quantity	L m	PERMBLEDHJE E ARMATURES			
					Ø mm	ΣL m	PESHA kg/ml weight	PESHA kg Weight
1	6	100	28	28.0	6	34.30	0.222	7.61
2	8	3513	1	35.13	8	76.60	0.395	29.06
3	8	3843	1	38.43				
4	6	15	42	6.30				
HEKURI PERIODIK PER NJE TUB/REBAR WEIGHT FOR 1 PRECASTED CULVERT							kg	36.67
HEKURI PERIODIK PER 29 TUBA/REBAR WEIGHT FOR 29 PRECASTED CULVERTS							kg	1063.43
TOMBINO E PARAPERGATITUR/PRECASTED TUBOLAR CULVERT							COPE	29

SHENIM

1. TUBAT REALIZOHEN ME B/ARME C30/37 DHE CELIK PERIODIK B500C, FYK=500MPA.
2. TUBAT JANE PARASHIKUAR PER LARTESI MBUSHJE MBI H=4.0m.

NOTE

1. PIPES ARE MADE WITH C30/37 CONCRETE AND PERIODIC STEEL B500C, FYK=500MPA.
2. THE PIPES ARE DESIGNED FOR A FILLING HEIGHT ABOVE H=4.0M.

INVESTITORI / INVESTOR
"Autoriteti Rrugor Shqiptar"
Address: Rr. "Sami Frasheri", Nr 33, Tirane
Mob: 04 222 3600
E-mail: info@arrsh.gov.al

InfraKonsult konsulence inxhinierike
HMK-CONSULTING SH.P.K Konsulence-Projektim-Mbikqyrje
JV: "InfraKonsult" shpk & "HMK-Consulting" shpk

"Studim Projektim - Zgjerimi i segmentit rrugor dalje Elbasan-Prrenjas-Qafe Thane", (Faza II) / "Design Study of road segment exit Elbasan-Prrenjas-Qafe Thane" (Phase II)

Armimi i Tombinos Ø1000mm / Pipe Culvert Ø1000mm Reinforcement- Km 7+302.00

FAZA - PROJEKT ZBATIM
PHASE - DETAIL DESIGN

SHKALLA / SCALE: 1:25
Data: Mars 2023
Date: March 2023
VIZATIMI Nr: / PAGE No: E (2)

PROJEKTUES: / DESIGN ENGINEERS:
Ing./Eng. Sokol METOJA
Ing./Eng. Redi STRUGA
Ing./Eng. Orgest MËRTIKA

PRERJE E PUSETES/ MANHOLE SECTION sh./sc.1:50

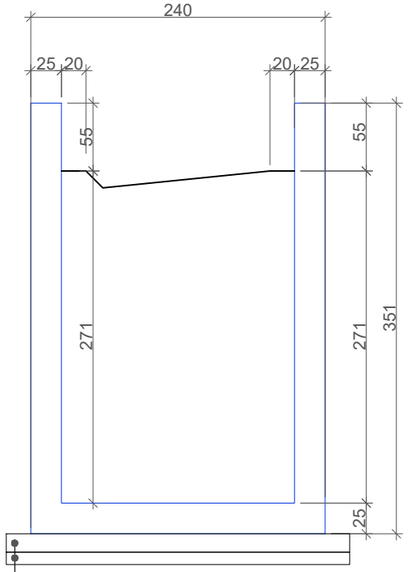

Beton/Lean concrete C 12/15 (15 cm)

Shtrese zhavori/Gravel layer (10 cm)

PLANIMETRI E PUSETES/MANHOLE PLANVIEW sh./sc.1:50

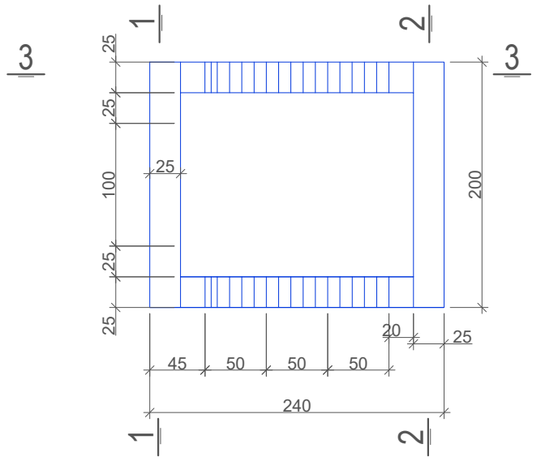

PRERJA/SECTION 3-3 sh./sc.1:50

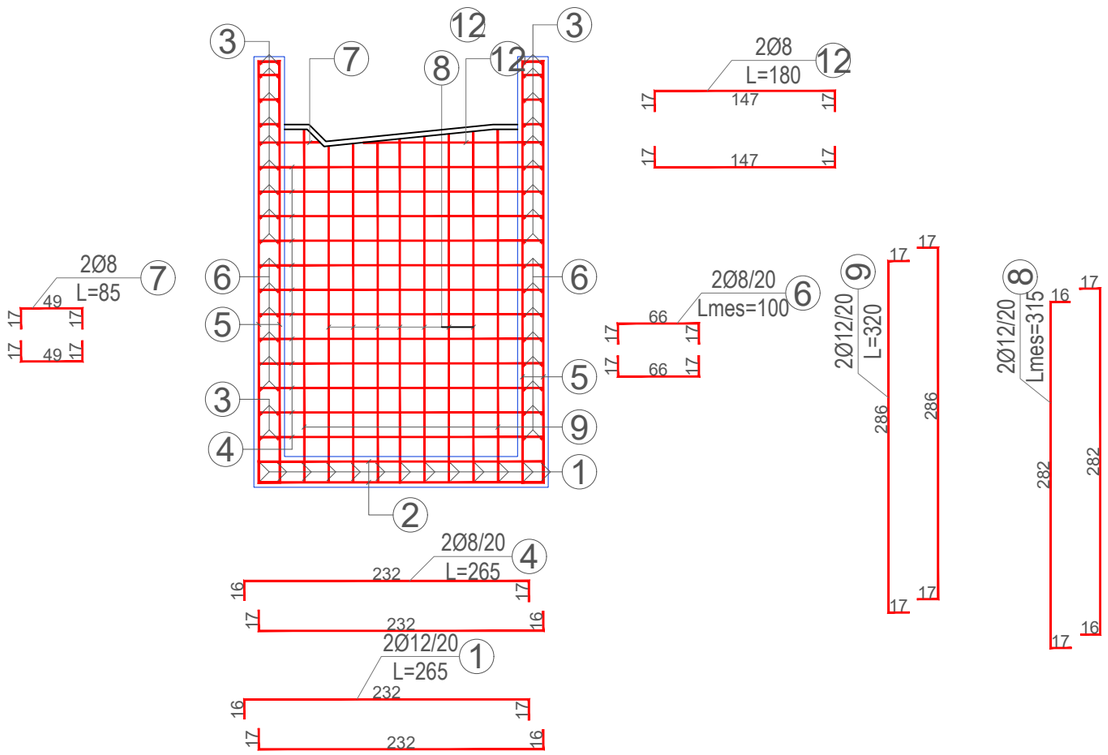

PRERJA/SECTION 1-1 sh./sc.1:50

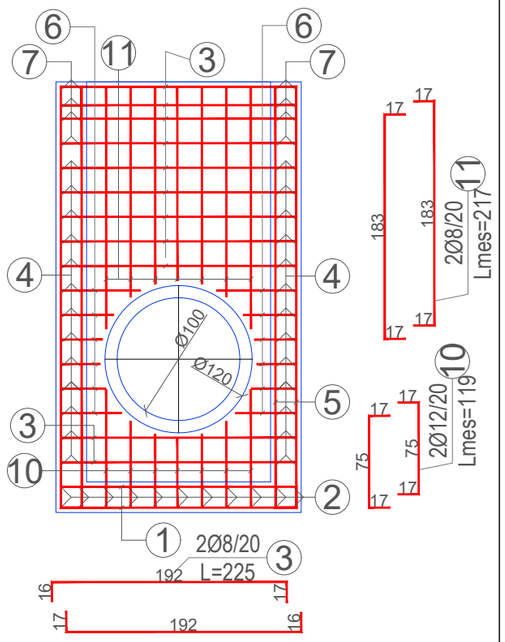

PRERJA/SECTION 2-2 sh./sc.1:50

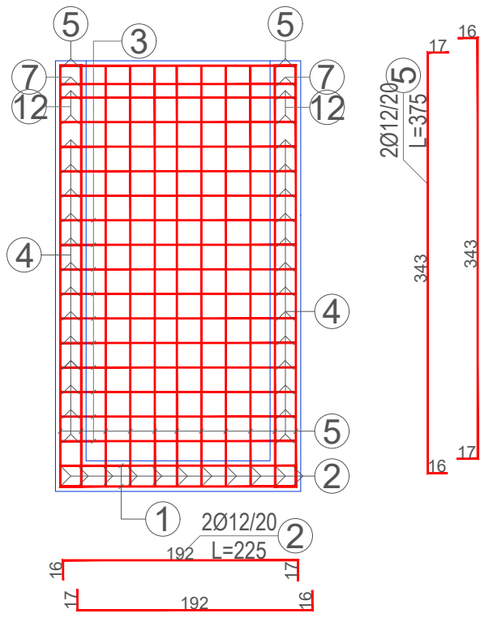

ELEMENTI		SPECIFIKIMI I ARMATURES					SPECIFIKIMET E ELEMANTIT			TOTAL (KG)
	cope	Poz	Φ	l (cm)	cope	L (m)	Φ	ΣL tot(m)	Pesha (per kg)	
Puseta 2.4x2m	1	1	12	265	26	68.9	6	0	0.222	0
		2	12	225	22	49.5	8	318	0.395	126
		3	8	225	56	126	10	0	0.617	0
		4	8	265	48	127.2	12	309	0.888	274
		5	12	375	16	60	14	0	1.208	0
		6	8	100	24	24	16	0	1.578	0
		7	8	85	4	3.4	18	0	1.998	0
		8	12	315	28	88.2	20	0	2.466	0
		9	12	320	8	25.6	22	0	2.984	0
		10	12	119	14	16.66	24	0	3.551	0
		11	8	217	14	30.38	25	0	3.853	0
						0				
		12	8	180	4	7.2				
						0				
						0				
				Beton C25/30					m3	6
				Ø 6 - 10 mm					kg	126
				Ø > 12 mm					kg	274

Shënime Teknike :
- Shtresa mbrojtëse është 4cm.
- Gjatësia minimale e mbivendosjes së shufrave është 50Ø.
- Klasa e betonit është C25/30.
- Klasa e çelikut është B450, fyk = 500 MPa.
- Klasa e betonit të varfër është C12/15.

- Technical Notes:
- The layer protector is 4cm.
- Minimum overlap length of bars is 50Ø.
- The class of concrete is C25/30.
- Steel class is B450, fyk = 500 MPa.
- The class of poor concrete is C12/15.

INVESTITORI / INVESTOR
"Autoriteti Rrugor Shqiptar"
Address: Rr. "Sami Frasheri", Nr 33, Tirane
Mob: 04 222 3600
E-mail: info@arrsh.gov.al

JV: "InfraKonsult" shpk & "HMK-Consulting" shpk

"Studim Projektim - Zgjerimi i segmentit rrugor dalje Elbasan-Prrenjas-Qafe Thane", (Faza II) / "Design Study of road segment exit Elbasan-Prrenjas-Qafe Thane" (Phase II)

Armimi i pusetes se Tombinos Ø1000mm / Pipe Culvert Ø1000mm manholeReinforcement- Km 7+302.00

FAZA - PROJEKT ZBATIM
PHASE - DETAIL DESIGN

SHKALLA / SCALE 1:25 — Data: Mars 2023 / Date: March 2023

VIZATIMI Nr: / PAGE No: E (3)

PROJEKTUES: / DESIGN ENGINEERS:
Ing./Eng. Sokol METOJA
Ing./Eng. Redi STRUGA
Ing./Eng. Orgest MËRTIKA

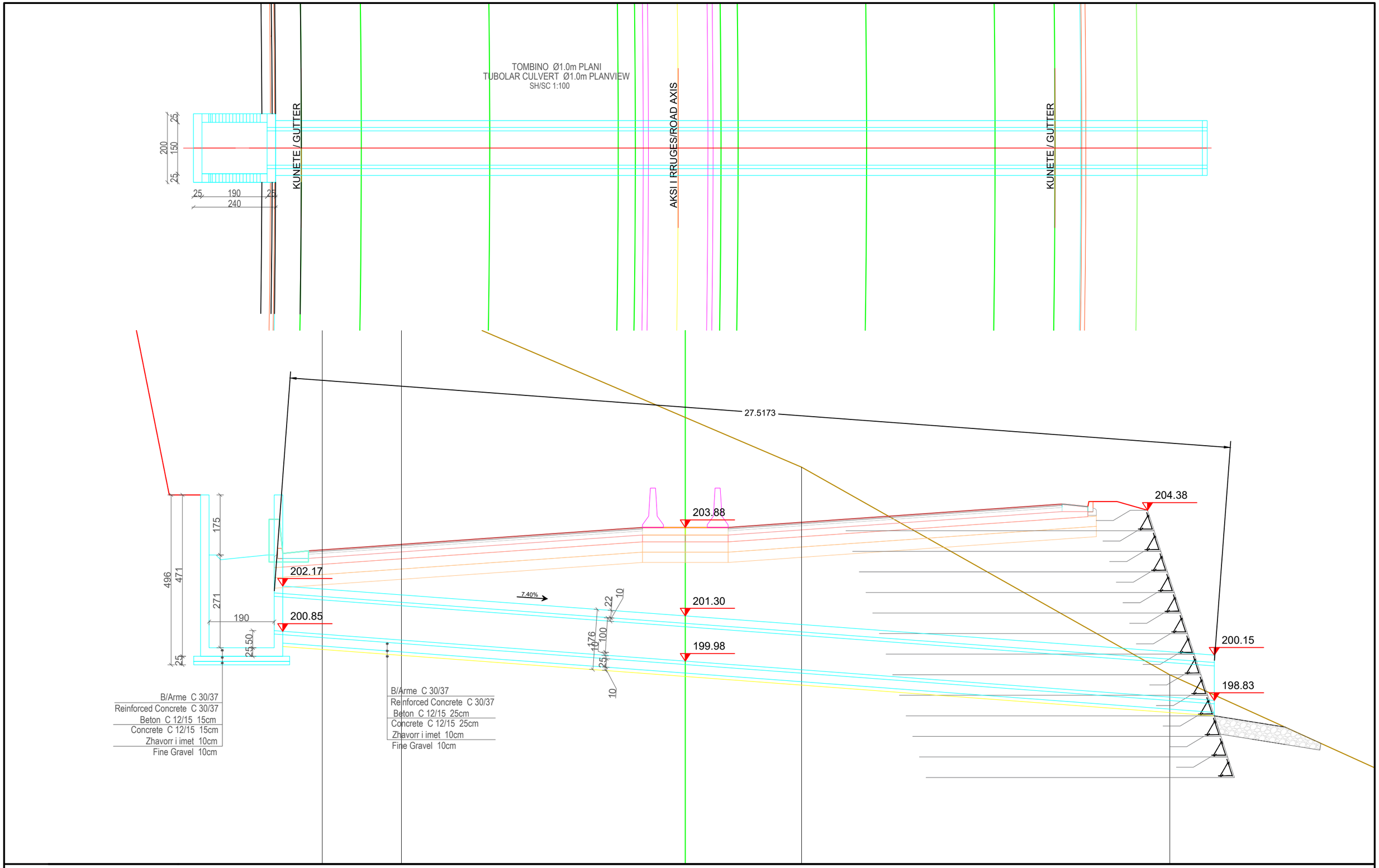

INVESTITORI / INVESTOR

"Autoriteti Rrugor Shqiptar"

Address: Rr. "Sami Frasheri", Nr 33, Tirane

Mob: 04 222 3600
E-mail: info@arrsh.gov.al

JV: "InfraKonsult" shpk & "HMK-Consulting" shpk

"Studim Projektim - Zgjerimi i segmentit rrugor dalje Elbasan-Prrenjas-Qafe Thane", (Faza II) / "Design Study of road segment exit Elbasan-Prrenjas-Qafe Thane" (Phase II)

Tombino Ø1000mm / Pipe Culvert Ø1000mm- Km 7+620

FAZA - PROJEKT ZBATIM
PHASE - DETAIL DESIGN

SHKALLA / SCALE	1:100	Data: Mars 2023 / Date: March 2023
VIZATIMI Nr: / PAGE No:	E (1)	

PROJEKTUES:
DESIGN ENGINEERS:
Ing./Eng. Sokol METOJA
Ing./Eng. Redi STRUGA
Ing./Eng. Orgest MËRTIKA

ARMIMI I TOMBINOS TUB D=100cm
TUBOLAR CULVERT REINFORCEMENT
SH.1:25

PRERJE TERTHORE
CROSS SECTION

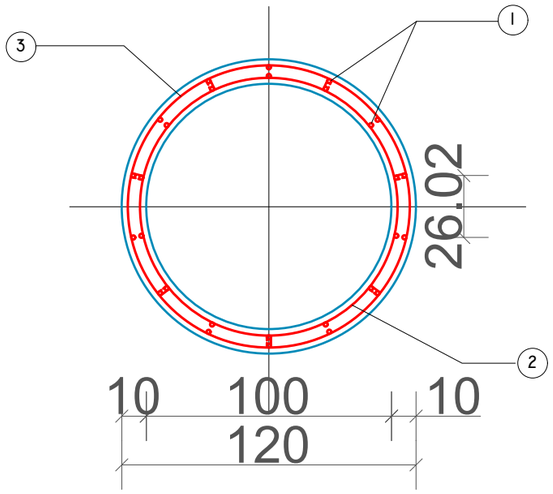

PRERJE GJATESORE
LONGITUDINAL SECTION

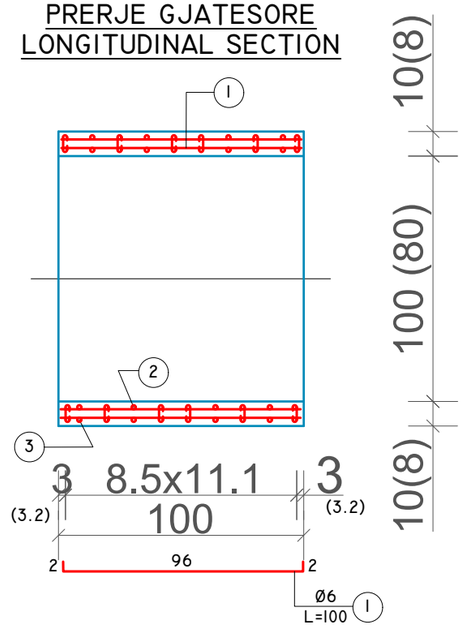

I JASHTEM
OUTSIDE SPIRAL

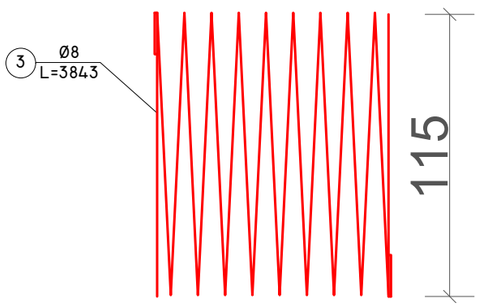

I BRENDSHEM
INSIDE SPIRAL

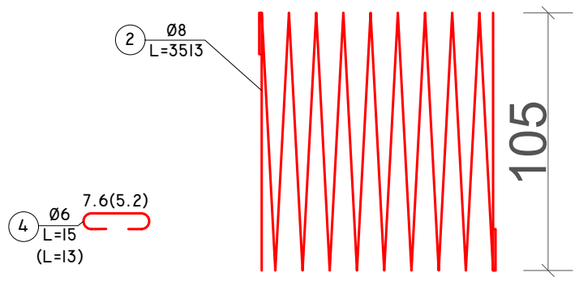

TABELA E HEKURIT/BAR SPECIFICATION

NR. POZ.	Ø mm	L cm	SASIA cope Quantity	L m	PERMBLEDHJE E ARMATURES			
					Ø mm	ΣL m	PESHA kg/ml weight	PESHA kg Weight
1	6	100	28	28.0	6	34.30	0.222	7.61
2	8	3513	1	35.13	8	76.60	0.395	29.06
3	8	3843	1	38.43				
4	6	15	42	6.30				
HEKURI PERIODIK PER NJE TUB/REBAR WEIGHT FOR 1 PRECASTED CULVERT							kg	36.67
HEKURI PERIODIK PER 28 TUBA/REBAR WEIGHT FOR 28 PRECASTED CULVERTS							kg	1026.76
TOMBINO E PARAPERGATITUR/PRECASTED TUBOLAR CULVERT							COPE	28

SHENIM

1. TUBAT REALIZOHEN ME B/ARME C30/37 DHE CELIK PERIODIK B500C, FYK=500MPA.
2. TUBAT JANE PARASHIKUAR PER LARTESI MBUSHJE MBI H=4.0m.

NOTE

1. PIPES ARE MADE WITH C30/37 CONCRETE AND PERIODIC STEEL B500C, FYK=500MPA.
2. THE PIPES ARE DESIGNED FOR A FILLING HEIGHT ABOVE H=4.0M.

INVESTITORI / INVESTOR
"Autoriteti Rrugor Shqiptar"
Address: Rr. "Sami Frasheri", Nr 33, Tirane
Mob: 04 222 3600
E-mail: info@arrsh.gov.al

JV: "InfraKonsult" shpk & "HMK-Consulting" shpk

"Studim Projektim - Zgjerimi i segmentit rrugor dalje Elbasan-Prrenjas-Qafe Thane", (Faza II) / "Design Study of road segment exit Elbasan-Prrenjas-Qafe Thane" (Phase II)

Armimi i Tombinos Ø1000mm / Pipe Culvert Ø1000mm Reinforcement- Km 7+620

FAZA - PROJEKT ZBATIM
PHASE - DETAIL DESIGN

SHKALLA SCALE	1:25	Data: Mars 2023 Date: March 2023
VIZATIMI Nr: PAGE No:	E (2)	

PROJEKTUES: DESIGN ENGINEERS:
Ing./Eng. Sokol METOJA
Ing./Eng. Redi STRUGA
Ing./Eng. Orgest MËRTIKA

PRERJE E PUSETES/
MANHOLE SECTION sh./sc.1:50

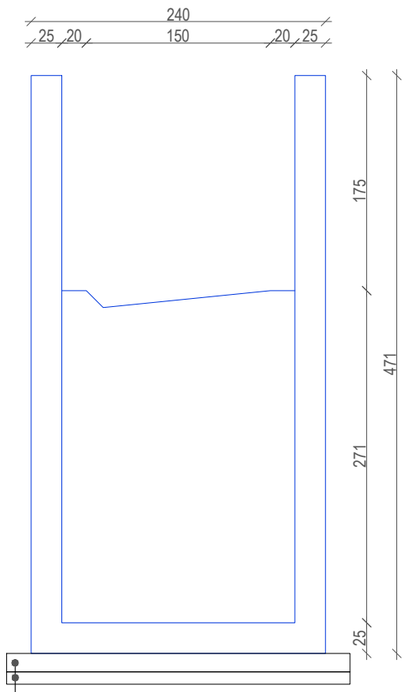

Beton/Lean concrete C 12/15 (15 cm)

Shtrese zhavori/Gravel layer (10 cm)

PLANIMETRI E PUSETES/
MANHOLE PLANVIEW sh./sc.1:50

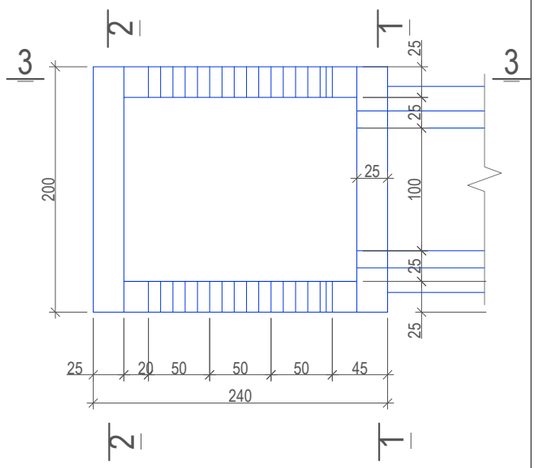

PRERJA/SECTION 3-3 sh./sc.1:50

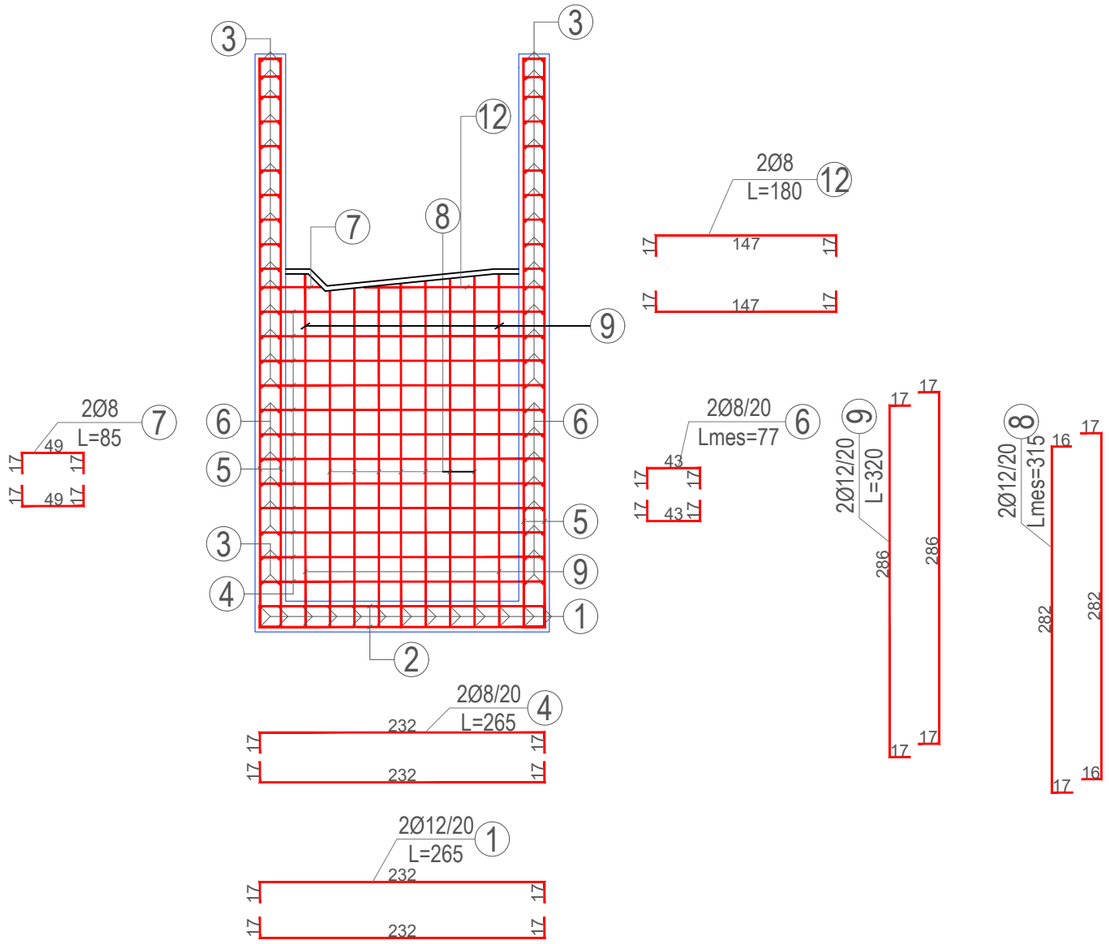

ELEMENTI		SPECIFIKIMI I ARMATURES					SPECIFIKIMET E ELEMANTIT			TOTAL (KG)
	cope	Poz	Φ	l (cm)	cope	L (m)	Φ	ΣLtot(m)	Pesha (per kg)	
Puseta 2.4x2m	1	1	12	265	26	68.9	6	0	0.222	0
		2	12	225	22	49.5	8	338	0.395	133
		3	8	225	68	153	10	0	0.617	0
		4	8	265	48	127.2	12	381	0.888	338
		5	12	496	24	119.04	14	0	1.208	0
		5'	12	376	4	18.48	16	0	1.578	0
		6	8	77	24	3.4	18	0	1.998	0
		7	8	85	4	88.2	20	0	2.466	0
		8	12	315	28	25.6	22	0	2.984	0
		9	12	320	8	14.42	24	0	3.551	0
		10	12	103	14	28.7	25	0	3.853	0
		11	8	205	14	7.2				
		12	8	180	4	0				
Beton C25/30									m3	8.50
Ø 6 - 10 mm									kg	133
Ø > 12 mm									kg	338

Shënime Teknike :
- Shtresa mbrojtëse është 4cm.
- Gjatësia minimale e mbivendosjes së shufrave është 50Ø.
- Klasa e betonit është C25/30.
- Klasa e çelikut është B450, fyk = 500 MPa.
- Klasa e betonit të varfër është C12/15.

- Technical Notes:
- The layer protector is 4cm.
- Minimum overlap length of bars is 50Ø.
- The class of concrete is C25/30.
- Steel class is B450, fyk = 500 MPa.
- The class of poor concrete is C12/15.

INVESTITORI / INVESTOR
"Autoriteti Rrugor Shqiptar"
Address: Rr. "Sami Frasheri", Nr 33, Tirane
Mob: 04 222 3600
E-mail: info@arrsh.gov.al

InfraKonsult konsulence inxhinierike
HMK-CONSULTING SH.P.K Konsulence-Projektim-Mbikqyrje
JV: "InfraKonsult" shpk & "HMK-Consulting" shpk

"Studim Projektim - Zgjerimi i segmentit rrugor dalje Elbasan-Prrenjas-Qafe Thane", (Faza II) / "Design Study of road segment exit Elbasan-Prrenjas-Qafe Thane" (Phase II)

Armimi i pusetes / Manhole Reinforcement- Km 7+620

FAZA - PROJEKT ZBATIM
PHASE - DETAIL DESIGN

SHKALLA / SCALE 1:50
Data: Mars 2023 / Date: March 2023
VIZATIMI Nr: / PAGE No: E (3)

PROJEKTUES: / DESIGN ENGINEERS:
Ing./Eng. Sokol METOJA
Ing./Eng. Redi STRUGA
Ing./Eng. Orgest MËRTIKA

PRERJA/SECTION 1-1 sh./sc.1:25

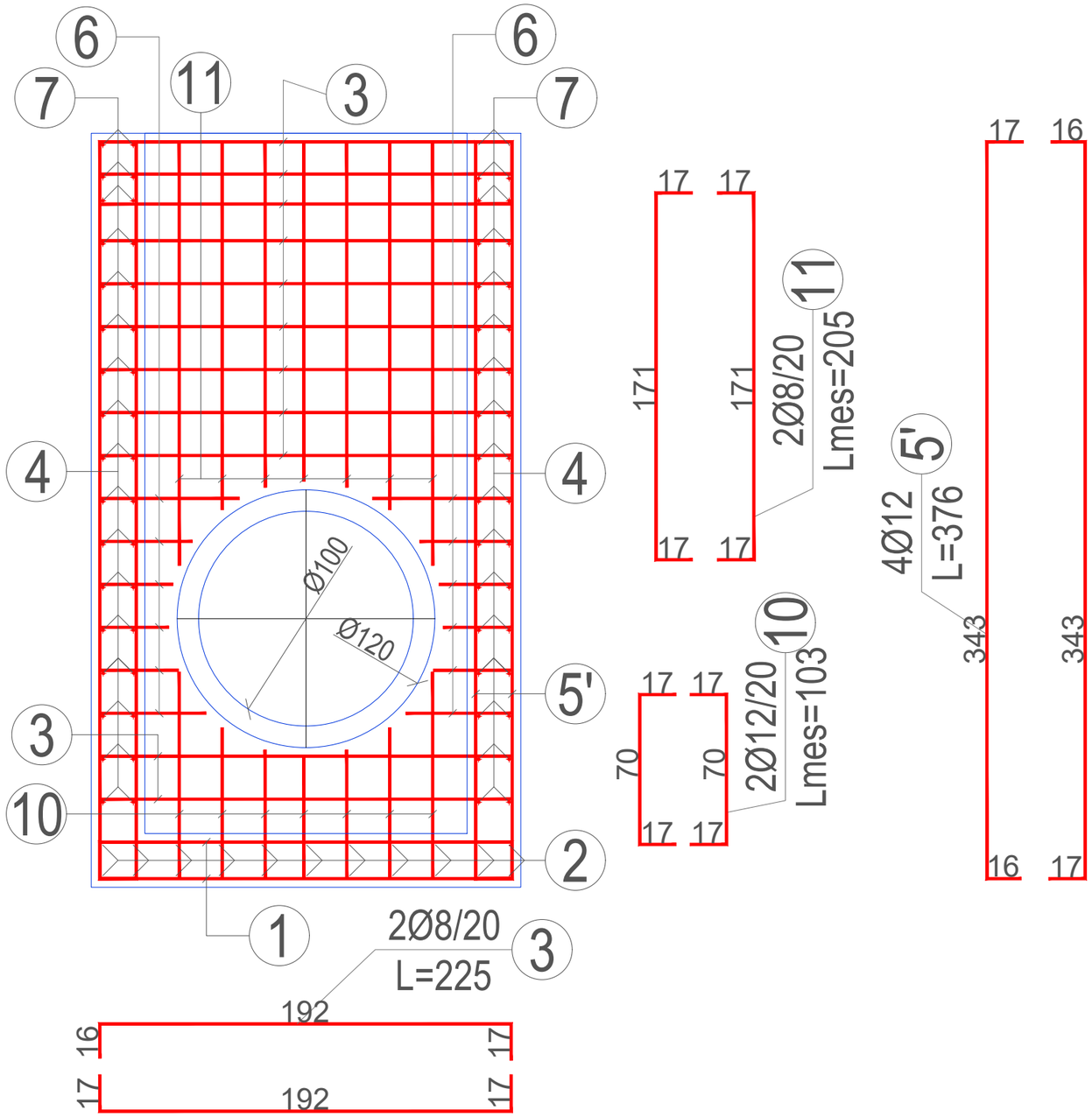

PRERJA/SECTION 2-2 sh./sc.1:40

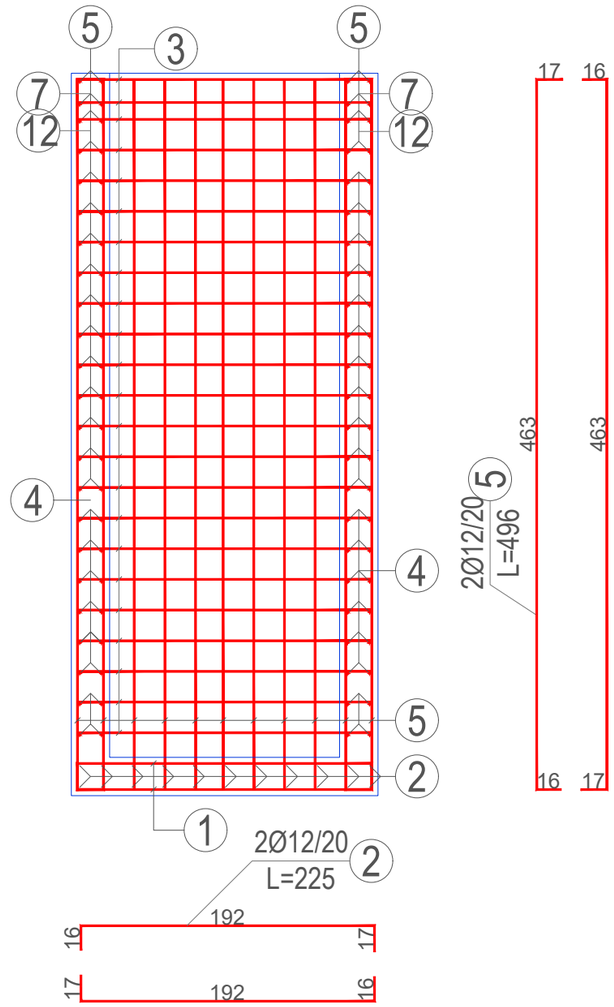

INVESTITORI / INVESTOR

"Autoriteti Rrugor Shqiptar"

Address: Rr. "Sami Frasheri", Nr 33, Tirane

Mob: 04 222 3600
E-mail: info@arrsh.gov.al

JV: "InfraKonsult" shpk & "HMK-Consulting" shpk

"Studim Projektim - Zgjerimi i segmentit rrugor dalje Elbasan-Prrenjas-Qafe Thane", (Faza II) / "Design Study of road segment exit Elbasan-Prrenjas-Qafe Thane" (Phase II)

Armimi i pusetes / Manhole Reinforcement- Km 7+620

FAZA - PROJEKT ZBATIM PHASE - DETAIL DESIGN		
SHKALLA SCALE	1:40 1:25	Data: Mars 2023 Date: March 2023
VIZATIMI Nr: PAGE No:	E (4)	

PROJEKTUES:
DESIGN ENGINEERS:

Ing./Eng. Sokol METOJA
Ing./Eng. Redi STRUGA
Ing./Eng. Orgest MËRTIKA

PLANI I TOMBINOS Ø1.0m
BOX CULVERT Ø1.0m PLANVIEW
SH/SC 1:150

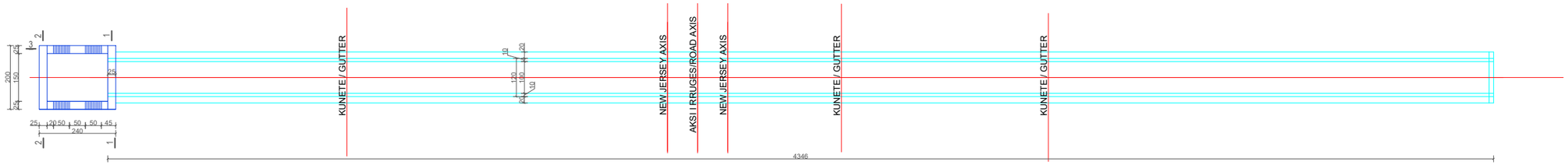

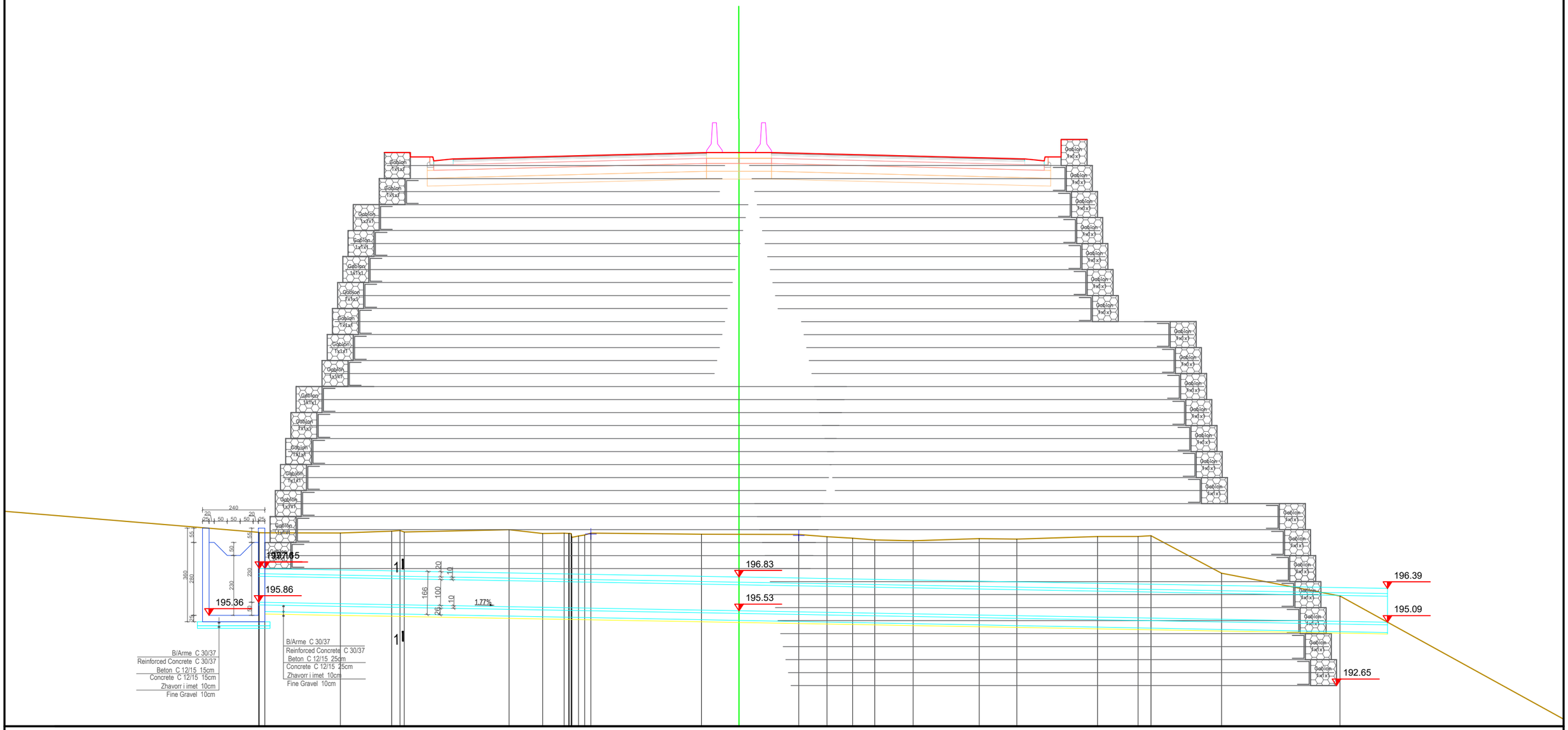

INVESTITORI / INVESTOR
"Autoriteti Rrugor Shqiptar"

Address: Rr. "Sami Frasheri", Nr 33, Tirane

Mob: 04 222 3600
E-mail: info@arrsh.gov.al

JV: "InfraKonsult" shpk & "HMK-Consulting" shpk

"Studim Projektim - Zgjerimi i segmentit rrugor dalje Elbasan-Prrenjas-Qafe Thane", (Faza II) / "Design Study of road segment exit Elbasan-Prrenjas-Qafe Thane" (Phase II)

Tombino Ø1000mm / Pipe Culvert Ø1000mm- Km 8+110.00

FAZA - PROJEKT ZBATIM
PHASE - DETAIL DESIGN

SHKALLA / SCALE	1:150	Data: Mars 2023 / Date: March 2023
VIZATIMI Nr: / PAGE No:	E (1)	

PROJEKTUES:
DESIGN ENGINEERS:
Ing./Eng. Sokol METOJA
Ing./Eng. Redi STRUGA
Ing./Eng. Orgest MËRTIKA

ARMIMI I TOMBINOS TUB D=100cm
TUBOLAR CULVERT REINFORCEMENT
SH.1:25

PRERJE TERTHORE
CROSS SECTION

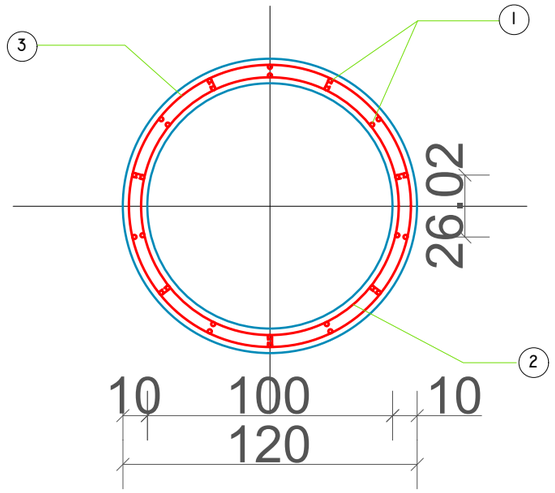

PRERJE GJATESORE
LONGITUDINAL SECTION

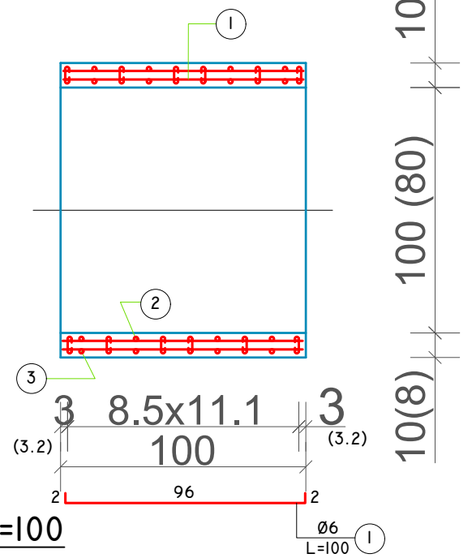

ARMATURA SPIRALE PER D=100

I JASHTEM
OUTSIDE SPIRAL

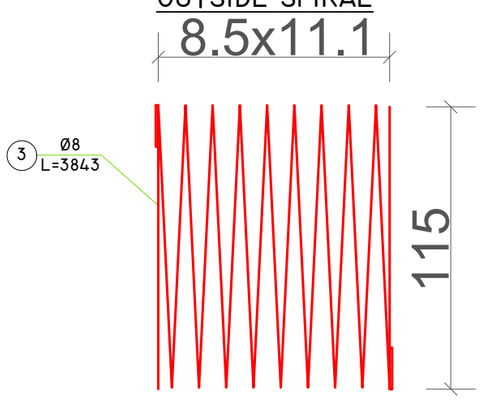

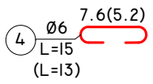

I BRENDSHEM
INSIDE SPIRAL

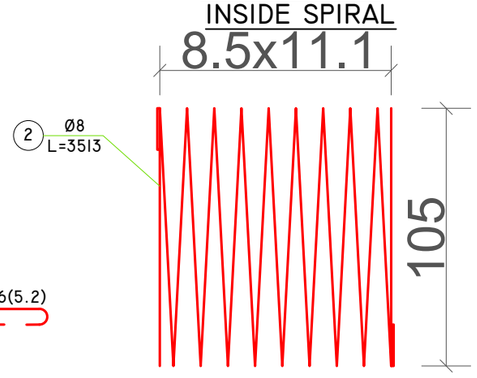

TABELA E HEKURIT/BAR SPECIFICATION

NR. POZ.	Ø mm	L cm	SASIA cope Quantity	L m	PERMBLEDHJE E ARMATURES			
					Ø mm	ΣL m	PESHA kg/ml weight	PESHA kg Weight
1	6	100	28	28.0	6	34.30	0.222	7.61
2	8	3513	1	35.13	8	76.60	0.395	29.06
3	8	3843	1	38.43				
4	6	15	42	6.30				
HEKURI PERIODIK PER NJE TUB/REBAR WEIGHT FOR 1 PRECASTED CULVERT							kg	36.67
HEKURI PERIODIK PER 44 TUBA/REBAR WEIGHT FOR 44 PRECASTED CULVERTS							kg	1613.48
TOMBINO E PARAPERGATITUR/PRECASTED TUBOLAR CULVERT							COPE	44

SHENIM
1. TUBAT REALIZOHEN ME B/ARME C30/37 DHE CELIK PERIODIK B500C DHE FYK= 500MPA.
2. TUBAT JANE PARASHIKUAR PER LARTESI MBUSHJE MBI H=4.0m.

TECHNICAL NOTES
1. PIPES ARE CARRIED OUT WITH REINFORCED CONCRETE C30/37 AND PERIODIC STEEL B500C AND FYK = 500MPA.
2. PIPES ARE PROVIDED FOR HEIGHT A FILLING ABOVE H = 4.0M.

INVESTITORI / INVESTOR
"Autoriteti Rrugor Shqiptar"
Address: Rr. "Sami Frasheri", Nr 33, Tirane
Mob: 04 222 3600
E-mail: info@arrsh.gov.al

JV: "InfraKonsult" shpk & "HMK-Consulting" shpk

"Studim Projektim - Zgjerimi i segmentit rrugor dalje Elbasan-Prrenjas-Qafe Thane", (Faza II) / "Design Study of road segment exit Elbasan-Prrenjas-Qafe Thane" (Phase II)

Armimi i Tombinos Ø1000mm / Pipe Culvert Ø1000mm Reinforcement- Km 8+110.00

FAZA - PROJEKT ZBATIM
PHASE - DETAIL DESIGN

SHKALLA SCALE	1:25	Data: Mars 2023 Date: March 2023
VIZATIMI Nr: PAGE No:	E (2)	

PROJEKTUES: DESIGN ENGINEERS:
Ing./Eng. Sokol METOJA
Ing./Eng. Redi STRUGA
Ing./Eng. Orgest MËRTIKA

PRERJE E PUSETES
MANHOLE SECTION sh./sc.1:50

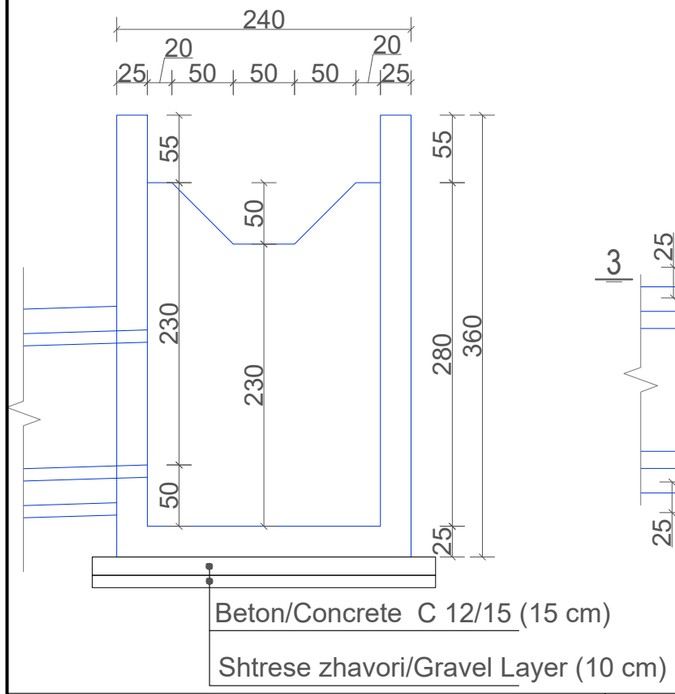

PLANIMETRI E PUSETES
MANHOLE PLANVIEW sh./sc.1:50

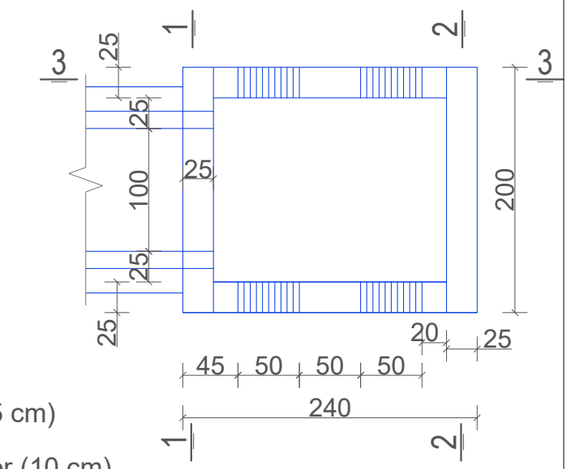

PRERJA/SECTION 3-3 sh./sc.1:50

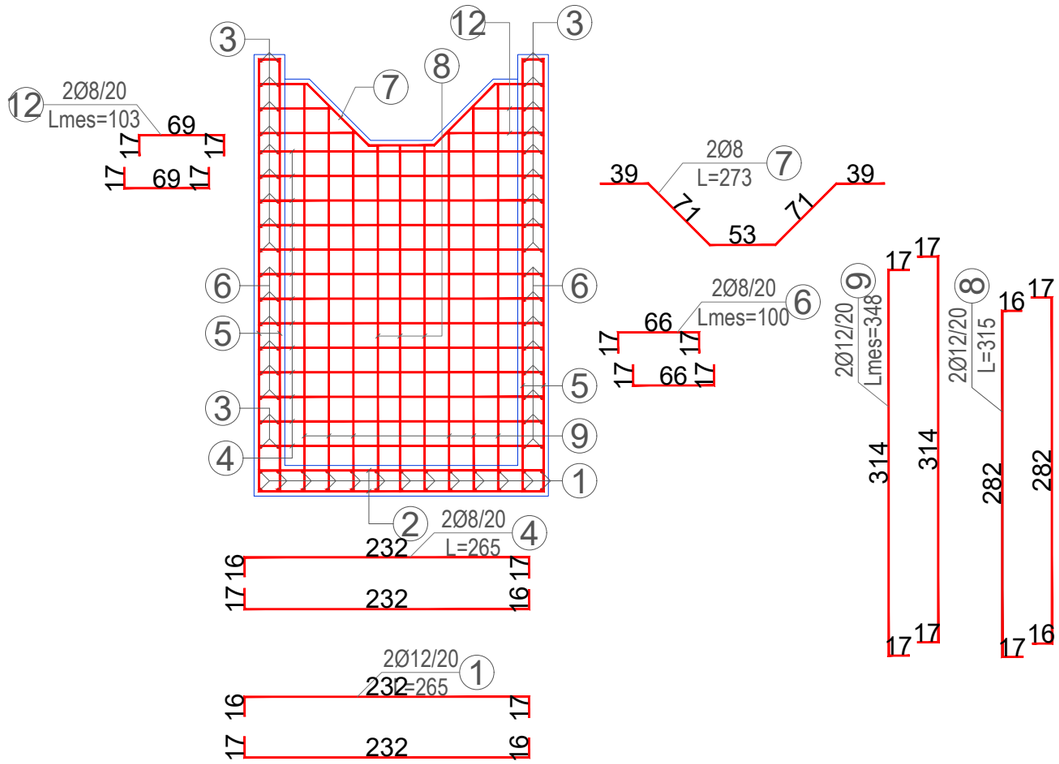

PRERJA/SECTION 1-1 sh./sc.1:50

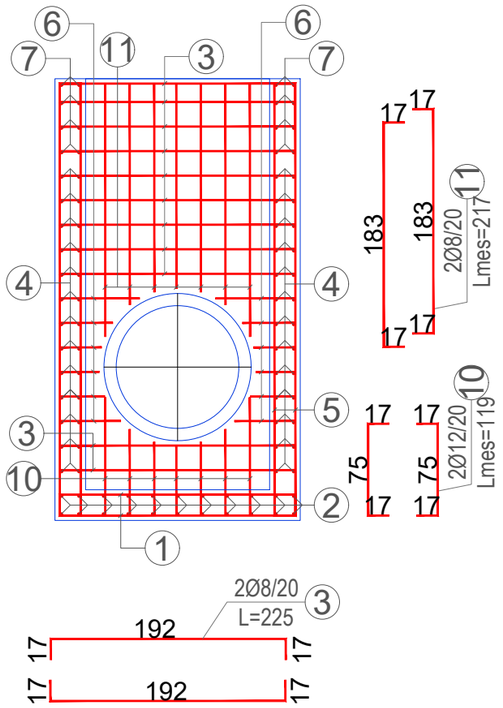

PRERJA/SECTION 2-2 sh./sc.1:50

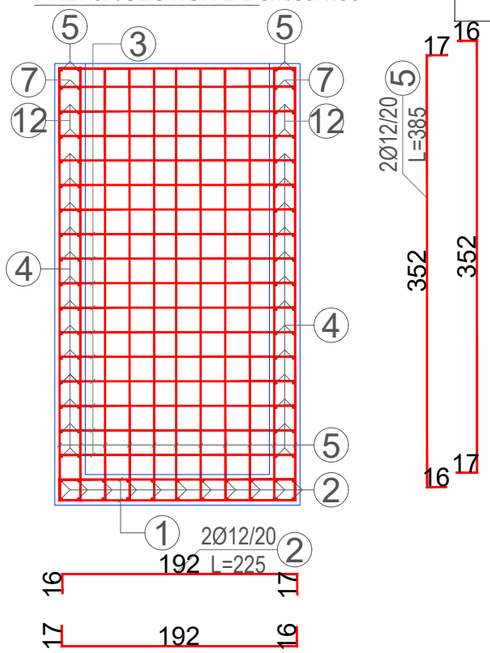

ELEMENTI		SPECIFIKIMI I ARMATURES					SPECIFIKIMET E ELEMANTIT			TOTAL (KG)
	cope	Poz	Φ	l (cm)	cope	L (m)	Φ	ΣLtot(m)	Pesha (per kg)	
Puseta 2.4x2m	1	1	12	265	30	79.5	6	0	0.222	0
		2	12	225	22	49.5	8	302	0.395	119
		3	8	225	44	99	10	0	0.617	0
		4	8	265	52	137.8	12	399	0.888	354
		5	12	385	30	115.5	14	0	1.208	0
		6	8	100	24	24	16	0	1.578	0
		7	8	273	4	10.92	18	0	1.998	0
		8	12	315	12	37.8	20	0	2.466	0
		9	12	348	24	83.52	22	0	2.984	0
		10	12	119	14	16.66	24	0	3.551	0
		11	8	217	14	30.38	25	0	3.853	0
		12	12	103	16	16.48				
						0				
						0				
						0				
Beton C25/30									m3	7
Ø 6 - 10 mm									kg	119
Ø > 12 mm									kg	354

Shënime Teknike :
- Shtresa mbrojtëse është 4cm.
- Gjatësia minimale e mbivendosjes së shufrave është 50Ø.
- Klasa e betonit është C30/37.
- Klasa e çelikut është B500C, fyk = 500 MPa.
- Klasa e betonit të varfër është C12/15.

Technical Notes:
- The protective layer is 4cm.
- Minimum overlapping length of rebars is 50Ø.
- The concrete class is C30/37.
- The steel class is B500C, FYK = 500 MPa.
- Poor concrete class is C12/15.

INVESTITORI / INVESTOR
"Autoriteti Rrugor Shqiptar"
Address: Rr. "Sami Frasheri", Nr 33, Tirane
Mob: 04 222 3600
E-mail: info@arrsh.gov.al

InfraKonsult konsulence inxhinierike
HMK-CONSULTING SH.P.K Konsulence-Projektim-Mbikqyrje
JV: "InfraKonsult" shpk & "HMK-Consulting" shpk

"Studim Projektim - Zgjerimi i segmentit rrugor dalje Elbasan-Prrenjas-Qafe Thane", (Faza II) / "Design Study of road segment exit Elbasan-Prrenjas-Qafe Thane" (Phase II)

Armimi i Pusetes se Tombinos Ø1000mm / Pipe Culvert Ø1000mm manhole Reinforcement - Km 8+110.00

FAZA - PROJEKT ZBATIM
PHASE - DETAIL DESIGN

SHKALLA / SCALE	1:50	Data: Mars 2023 / Date: March 2023
VIZATIMI Nr: / PAGE No:	E (3)	

PROJEKTUES: / DESIGN ENGINEERS:
Ing./Eng. Sokol METOJA
Ing./Eng. Redi STRUGA
Ing./Eng. Orgest MËRTIKA

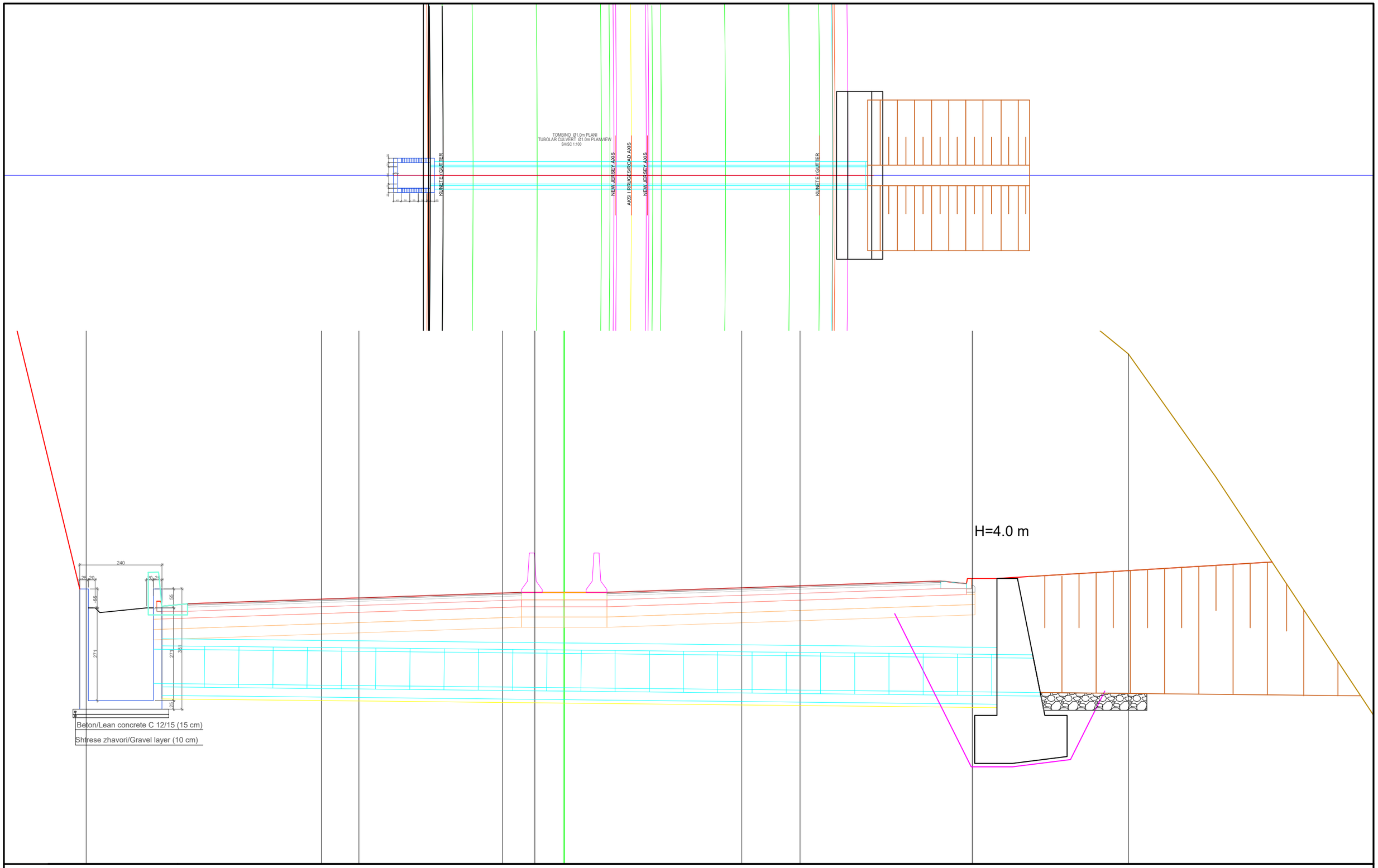

INVESTITORI / INVESTOR

"Autoriteti Rrugor Shqiptar"

Address: Rr. "Sami Frasheri", Nr 33, Tirane

Mob: 04 222 3600
E-mail: info@arrsh.gov.al

JV: "InfraKonsult" shpk & "HMK-Consulting" shpk

"Studim Projektim - Zgjerimi i segmentit rrugor dalje Elbasan-Prrenjas-Qafe Thane", (Faza II) / "Design Study of road segment exit Elbasan-Prrenjas-Qafe Thane" (Phase II)

Tombino Ø1000mm / Pipe Culvert Ø1000mm- Km 8+315.00

FAZA - PROJEKT ZBATIM
PHASE - DETAIL DESIGN

SHKALLA / SCALE	*1:100* / *1:200*	*Data: Mars 2023* / *Date: March 2023*
VIZATIMI Nr: / PAGE No:	*E (1)*	

PROJEKTUES: / DESIGN ENGINEERS:
Ing./Eng. Sokol METOJA
Ing./Eng. Redi STRUGA
Ing./Eng. Orgest MËRTIKA

ARMIMI I TOMBINOS TUB D=100cm
PIPE CULVERT REINFORCEMENT
SH.I:25

PRERJE TERTHORE
CROSS SECTION

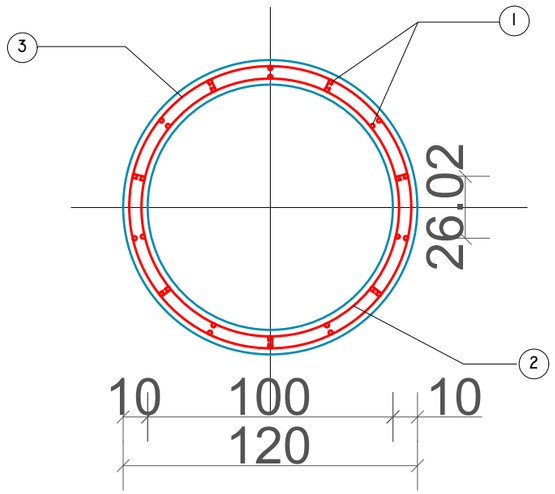

PRERJE GJATESORE
LONGITUDINAL SECTION

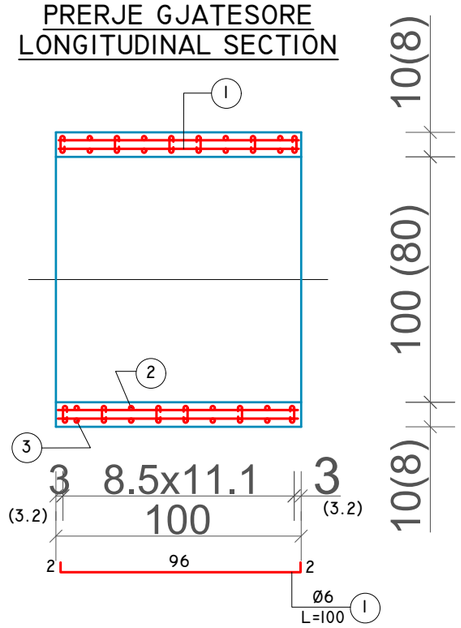

TABELA E HEKURIT/BAR SPECIFICATION

NR. POZ.	Ø mm	L cm	SASIA cope Quantity	L m	PERMBLEDHJE E ARMATURES			
					Ø mm	ΣL m	PESHA kg/ml weight	PESHA kg Weight
1	6	100	28	28.0	6	34.30	0.222	7.61
2	8	3513	1	35.13	8	76.60	0.395	29.06
3	8	3843	1	38.43				
4	6	15	42	6.30				
HEKURI PERIODIK PER NJE TUB/REBAR WEIGHT FOR 1 PRECASTED CULVERT							kg	36.67
HEKURI PERIODIK PER 26 TUBA/REBAR WEIGHT FOR 26 PRECASTED CULVERTS							kg	953.42
TOMBINO E PARAPERGATITUR/PRECASTED TUBOLAR CULVERT							COPE	26

I JASHTEM
OUTSIDE SPIRAL

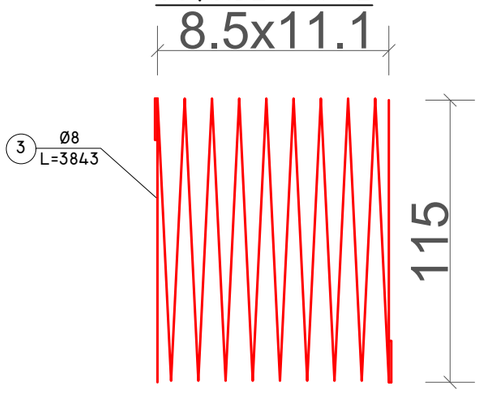

I BRENDSHEM
INSIDE SPIRAL

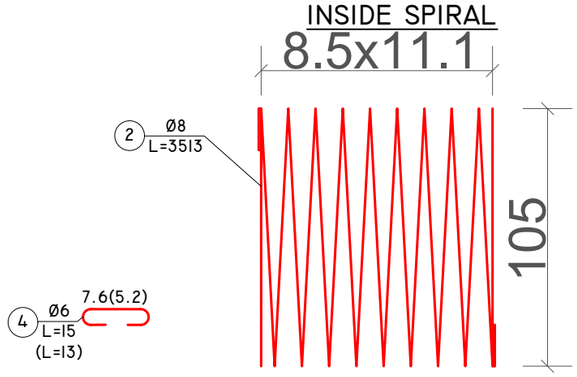

SHENIM

1. TUBAT REALIZOHEN ME B/ARME C30/37 DHE CELIK PERIODIK B500C, FYK=500MPA.
2. TUBAT JANE PARASHIKUAR PER LARTESI MBUSHJE MBI H=4.0m.

NOTE

1. PIPES ARE MADE WITH C30/37 CONCRETE AND PERIODIC STEEL B500C, FYK=500MPA.
2. THE PIPES ARE DESIGNED FOR A FILLING HEIGHT ABOVE H=4.0M.

INVESTITORI / INVESTOR
"Autoriteti Rrugor Shqiptar"
Address: Rr. "Sami Frasheri", Nr 33, Tirane
Mob: 04 222 3600
E-mail: info@arrsh.gov.al

JV: "InfraKonsult" shpk & "HMK-Consulting" shpk

"Studim Projektim - Zgjerimi i segmentit rrugor dalje Elbasan-Prrenjas-Qafe Thane", (Faza II) / "Design Study of road segment exit Elbasan-Prrenjas-Qafe Thane" (Phase II)

Armimi i TombinoS Ø1000mm / Pipe Culvert Ø1000mm Reinforcement- Km 8+315.00

FAZA - PROJEKT ZBATIM
PHASE - DETAIL DESIGN

SHKALLA / SCALE 1:25
Data: Mars 2023
Date: March 2023
VIZATIMI Nr: / PAGE No: E (2)

PROJEKTUES: / DESIGN ENGINEERS:
Ing./Eng. Sokol METOJA
Ing./Eng. Redi STRUGA
Ing./Eng. Orgest MËRTIKA

PRERJE E PUSETES/ MANHOLE SECTION sh./sc.1:50

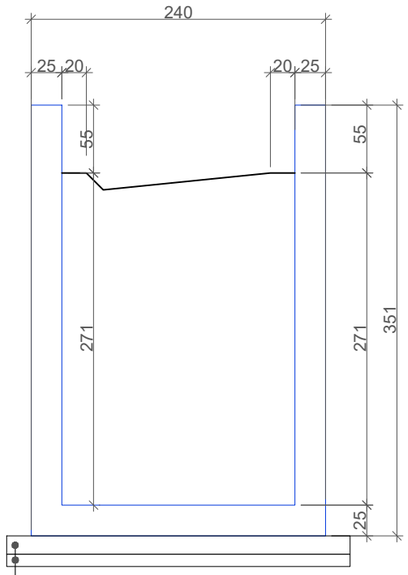

Beton/Lean concrete C 12/15 (15 cm)

Shtrese zhavori/Gravel layer (10 cm)

PLANIMETRI E PUSETES/MANHOLE PLANVIEW sh./sc.1:50

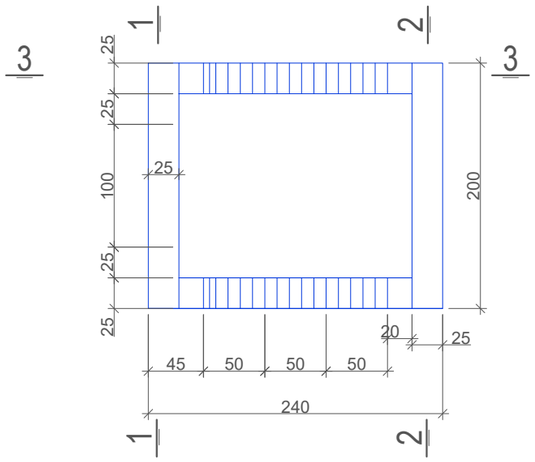

PRERJA/SECTION 3-3 sh./sc.1:50

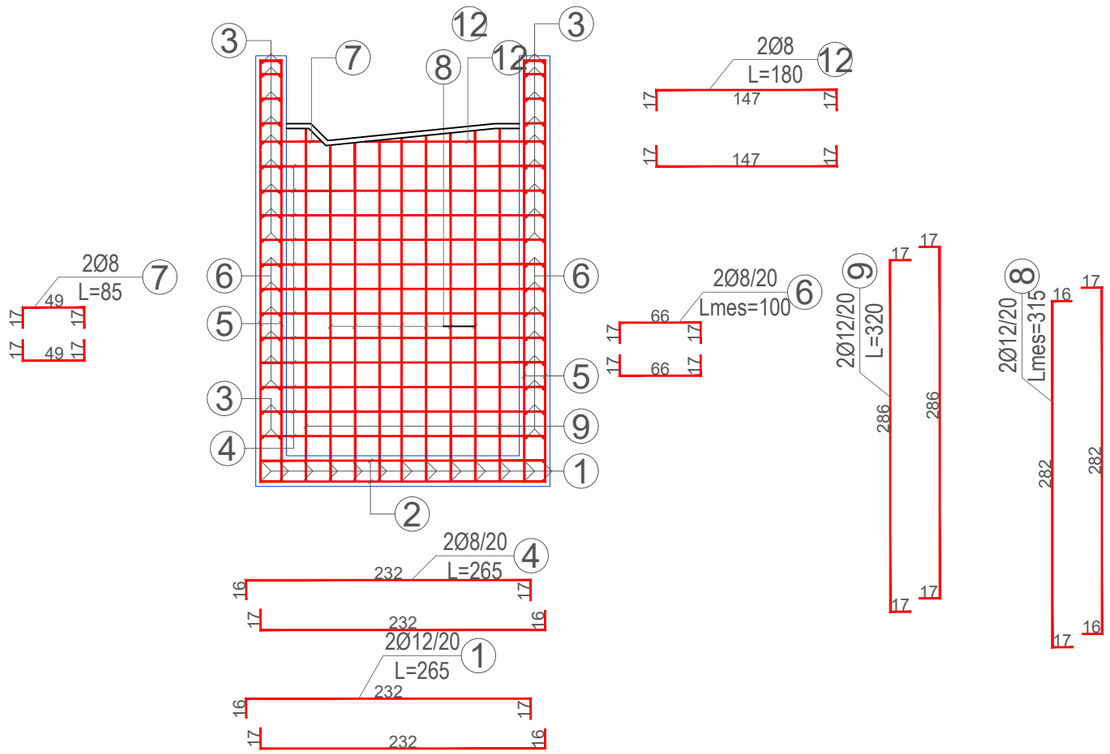

PRERJA/SECTION 1-1 sh./sc.1:50

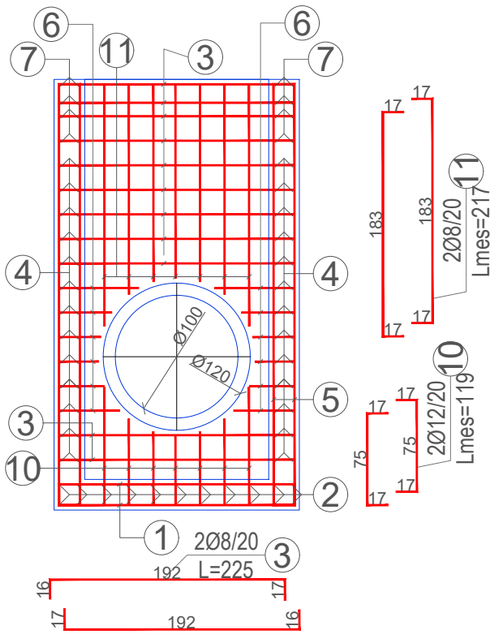

PRERJA/SECTION 2-2 sh./sc.1:50

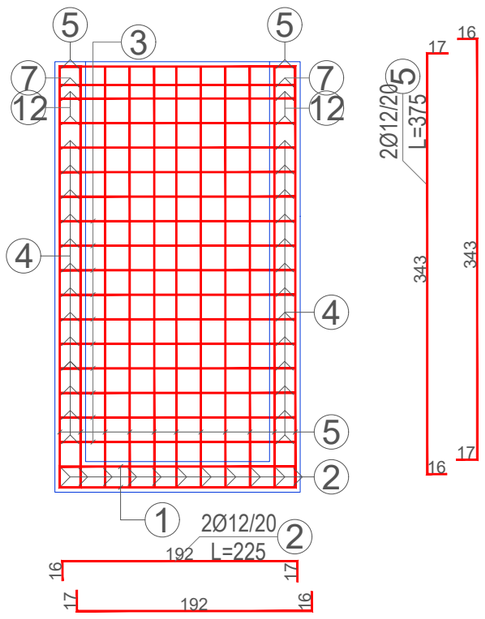

ELEMENTI		SPECIFIKIMI I ARMATURES					SPECIFIKIMET E ELEMANTIT			TOTAL (KG)
	cope	Poz	Φ	l (cm)	cope	L (m)	Φ	ΣLtot(m)	Pesha (per kg)	
Puseta 2.4x2m	1	1	12	265	26	68.9	6	0	0.222	0
		2	12	225	22	49.5	8	318	0.395	126
		3	8	225	56	126	10	0	0.617	0
		4	8	265	48	127.2	12	309	0.888	274
		5	12	375	16	60	14	0	1.208	0
		6	8	100	24	24	16	0	1.578	0
		7	8	85	4	3.4	18	0	1.998	0
		8	12	315	28	88.2	20	0	2.466	0
		9	12	320	8	25.6	22	0	2.984	0
		10	12	119	14	16.66	24	0	3.551	0
		11	8	217	14	30.38	25	0	3.853	0
						0				
		12	8	180	4	7.2				
						0				
						0				
Beton C25/30									m3	6
Ø 6 - 10 mm									kg	126
Ø > 12 mm									kg	274

Shënime Teknike :

- Shtresa mbrojtëse është 4cm.
- Gjatësia minimale e mbivendosjes së shufrave është 50Ø.
- Klasa e betonit është C25/30.
- Klasa e çelikut është B450, fyk = 500 MPa.
- Klasa e betonit të varfër është C12/15.

- Technical Notes:

- The layer protector is 4cm.
- Minimum overlap length of bars is 50Ø.
- The class of concrete is C25/30.
- Steel class is B450, fyk = 500 MPa.
- The class of poor concrete is C12/15.

INVESTITORI / INVESTOR

"Autoriteti Rrugor Shqiptar"

Address: Rr. "Sami Frasheri", Nr 33, Tirane

Mob: 04 222 3600
E-mail: info@arrsh.gov.al

JV: "InfraKonsult" shpk & "HMK-Consulting" shpk

"Studim Projektim - Zgjerimi i segmentit rrugor dalje Elbasan-Prrenjas-Qafe Thane", (Faza II) / "Design Study of road segment exit Elbasan-Prrenjas-Qafe Thane" (Phase II)

Armimi i pusetes / Manhole Reinforcement- Km 8+315.00

FAZA - PROJEKT ZBATIM
PHASE - DETAIL DESIGN

SHKALLA / SCALE	1:50	Data: Mars 2023 / Date: March 2023
VIZATIMI Nr: / PAGE No:	E (3)	

PROJEKTUES:
DESIGN ENGINEERS:

Ing./Eng. Sokol METOJA
Ing./Eng. Redi STRUGA
Ing./Eng. Orgest MËRTIKA

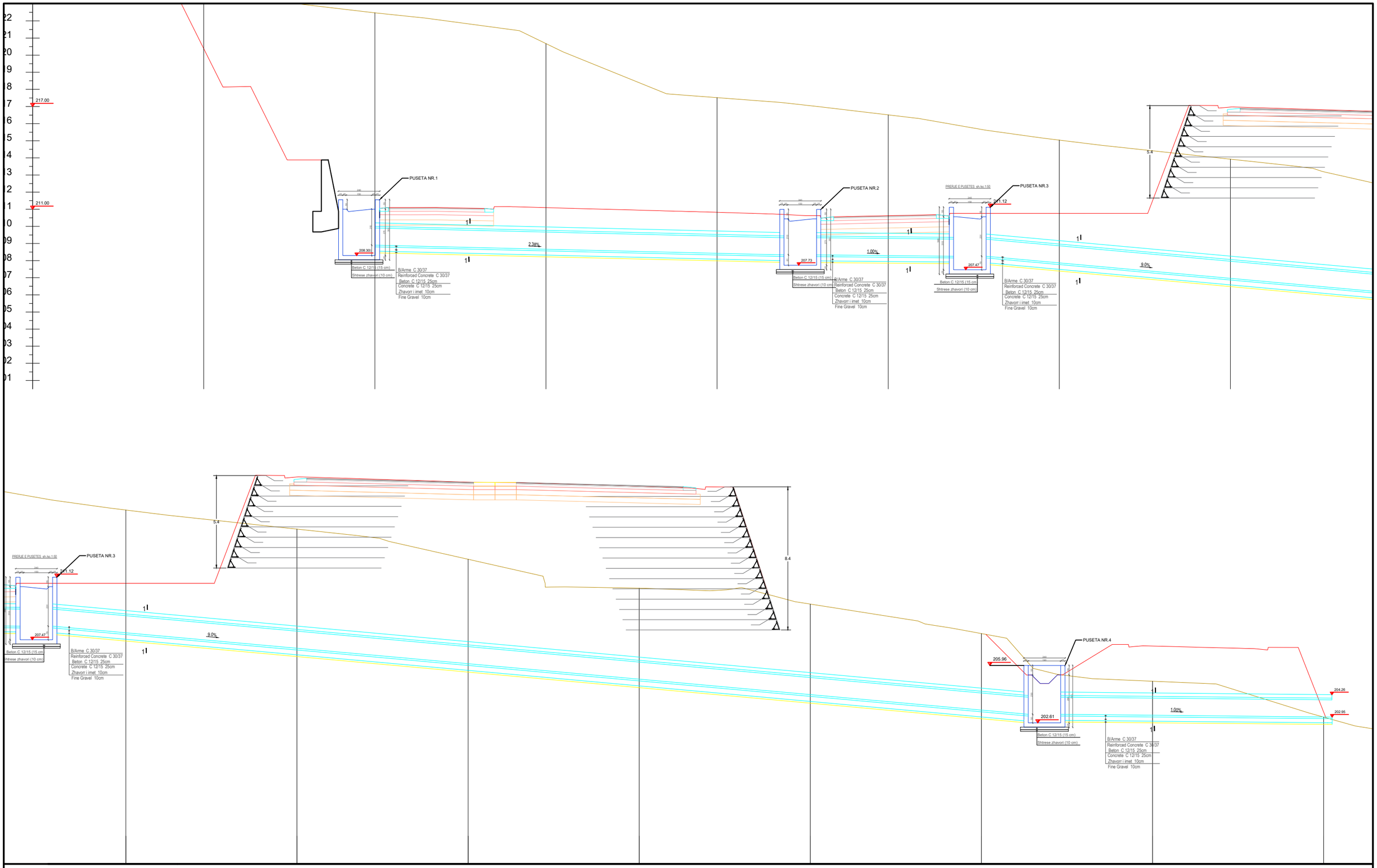

INVESTITORI / INVESTOR

"Autoriteti Rrugor Shqiptar"

Address: Rr. "Sami Frasheri", Nr 33, Tirane

Mob: 04 222 3600
E-mail: info@arrsh.gov.al

JV: "InfraKonsult" shpk & "HMK-Consulting" shpk

"Studim Projektim - Zgjerimi i segmentit rrugor dalje Elbasan-Prrenjas-Qafe Thane", (Faza II) / "Design Study of road segment exit Elbasan-Prrenjas-Qafe Thane" (Phase II)

Tombino D1000 mm / Pipe Culvert D1000 mm - Nyja

FAZA - PROJEKT ZBATIM
PHASE - DETAIL DESIGN

SHKALLA / SCALE	1:200	Data: Mars 2023 / Date: march 2023
VIZATIMI Nr: / PAGE No:	E (1)	

PROJEKTUES: / DESIGN ENGINEERS:
Ing./Eng. Sokol METOJA
Ing./Eng. Redi STRUGA
Ing./Eng. Orgest MËRTIKA

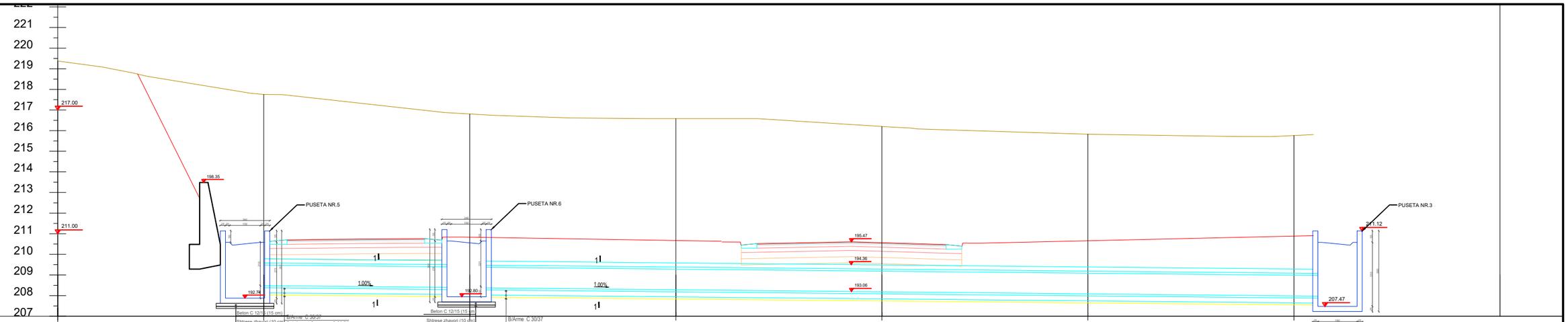

SEKSIONIT	1 0+000	2	3 0+020	4	5 0+040	6	7 0+060	8
A PJESORE	0.00	10.00	10.00	10.00	10.00	10.00	10.00	10.00
ROGRESIVE	0.00	10.00	20.00	30.00	40.00	50.00	60.00	70.00

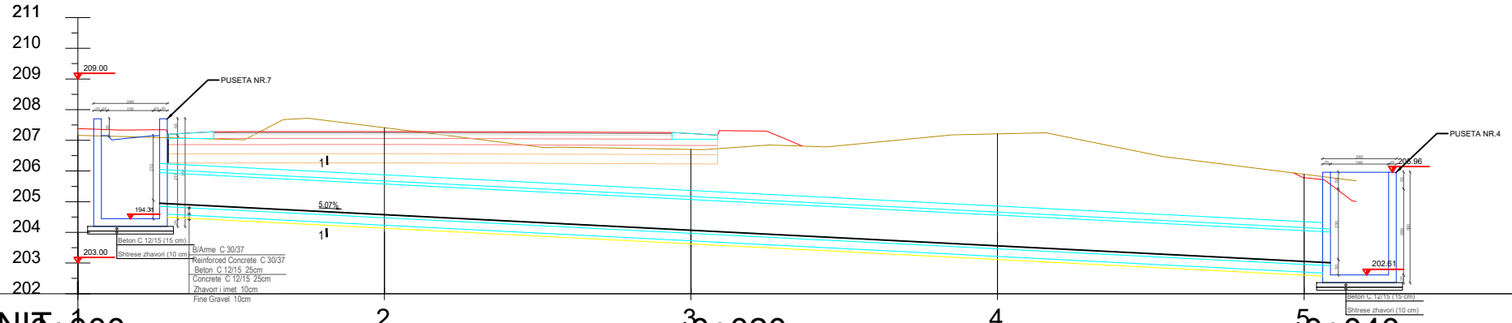

NUMRI I SEKSIONIT	1 0+000	2	3 0+020	4	5 0+040	6	7 0+06
DISTANCA PJESORE	0.00	10.00	10.00	10.00	10.00	10.00	10.00
DISTANCA PROGRESIVE	0.00	10.00	20.00	30.00	40.00	50.00	60.00
KUOTA E TOKES	207.16	207.41	206.70	207.21	205.89		
NIVELETA	L 41.70						

INVESTITORI / INVESTOR
"Autoriteti Rrugor Shqiptar"
Address: Rr. "Sami Frasheri", Nr 33, Tirane
Mob: 04 222 3600
E-mail: info@arrsh.gov.al

JV: "InfraKonsult" shpk & "HMK-Consulting" shpk

"Studim Projektim - Zgjerimi i segmentit rrugor dalje Elbasan-Prrenjas-Qafe Thane", (Faza II) / "Design Study of road segment exit Elbasan-Prrenjas-Qafe Thane" (Phase II)

Tombino D1000 mm / Pipe Culvert D1000 mm - Nyja

FAZA - PROJEKT ZBATIM
PHASE - DETAIL DESIGN

SHKALLA / SCALE	1:200	Data: Mars 2023 / Date: march 2023
VIZATIMI Nr: / PAGE No:	E (2)	

PROJEKTUES: / DESIGN ENGINEERS:
Ing./Eng. Sokol METOJA
Ing./Eng. Redi STRUGA
Ing./Eng. Orgest MËRTIKA

ARMIMI I TOMBINOS TUB D=100cm
TUBOLAR CULVERT REINFORCEMENT
SH.1:25

PRERJE TERTHORE
CROSS SECTION

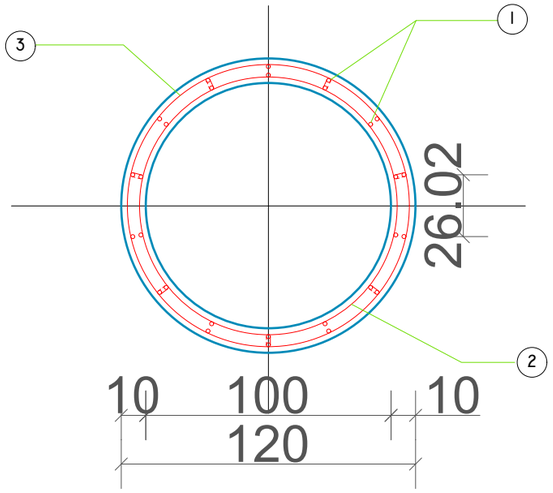

PRERJE GJATESORE
LONGITUDINAL SECTION

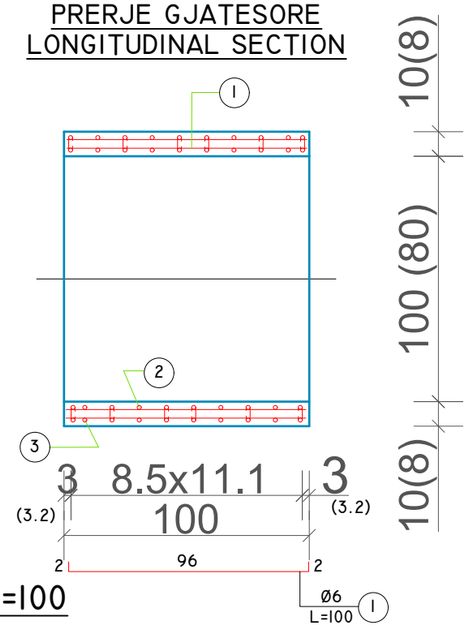

ARMATURA SPIRALE PER D=100

I JASHTEM
OUTSIDE SPIRAL

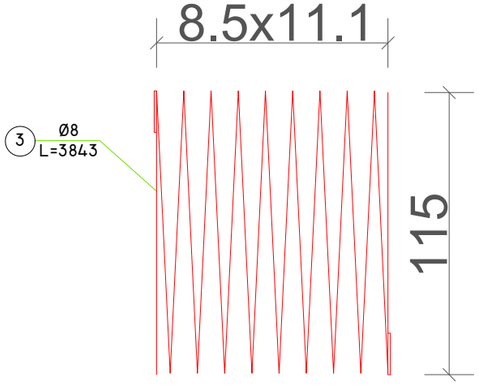

I BRENDSHEM
INSIDE SPIRAL

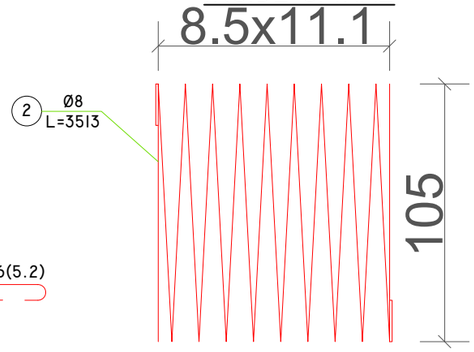

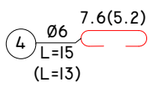

TABELA E HEKURIT/BAR SPECIFICATION

NR. POZ.	Ø mm	L cm	SASIA cope Quantity	L m	PERMBLEDHJE E ARMATURES			
					Ø mm	ΣL m	PESHA kg/ml weight	PESHA kg Weight
1	6	100	28	28.0	6	34.30	0.222	7.61
2	8	3513	1	35.13	8	76.60	0.395	29.06
3	8	3843	1	38.43				
4	6	15	42	6.30				
HEKURI PERIODIK PER NJE TUB/REBAR WEIGHT FOR 1 PRECASTED CULVERT							kg	36.67
HEKURI PERIODIK PER 195 TUBA/REBAR WEIGHT FOR 195 PRECASTED CULVERTS							kg	7150.65
TOMBINO E PARAPERGATITUR/PRECASTED TUBOLAR CULVERT							COPE	195

SHENIM

1. TUBAT REALIZOHEN ME B/ARME C30/37 DHE CELIK PERIODIK B500C, FYK=500MPA.
2. TUBAT JANE PARASHIKUAR PER LARTESI MBUSHJE MBI H=4.0m.

NOTE

1. PIPES ARE MADE WITH C30/37 CONCRETE AND PERIODIC STEEL B500C, FYK=500MPA.
2. THE PIPES ARE DESIGNED FOR A FILLING HEIGHT ABOVE H=4.0M.

INVESTITORI / INVESTOR
"Autoriteti Rrugor Shqiptar"
Address: Rr. "Sami Frasheri", Nr 33, Tirane
Mob: 04 222 3600
E-mail: info@arrsh.gov.al

JV: "InfraKonsult" shpk & "HMK-Consulting" shpk

"Studim Projektim - Zgjerimi i segmentit rrugor dalje Elbasan-Prrenjas-Qafe Thane", (Faza II) / "Design Study of road segment exit Elbasan-Prrenjas-Qafe Thane" (Phase II)

Tombino D1000 mm / Pipe Culvert D1000 mm - Nyja

FAZA - PROJEKT ZBATIM
PHASE - DETAIL DESIGN

SHKALLA SCALE	1:200	Data: Mars 2023 Date: march 2023
VIZATIMI Nr: PAGE No:	E (3)	

PROJEKTUES: DESIGN ENGINEERS:
Ing./Eng. Sokol METOJA
Ing./Eng. Redi STRUGA
Ing./Eng. Orgest MËRTIKA

PRERJE E PUSETES/ MANHOLE SECTION sh./sc.1:50

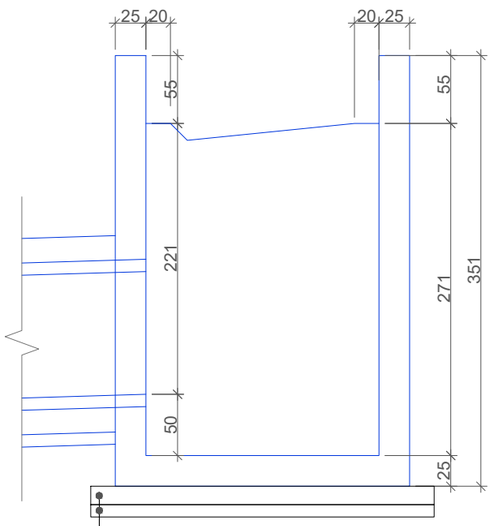

Beton/Lean concrete C 12/15 (15 cm)

Shtrese zhavori/Gravel layer (10 cm)

PLANIMETRI E PUSETES/MANHOLE PLANVIEW sh./sc.1:50

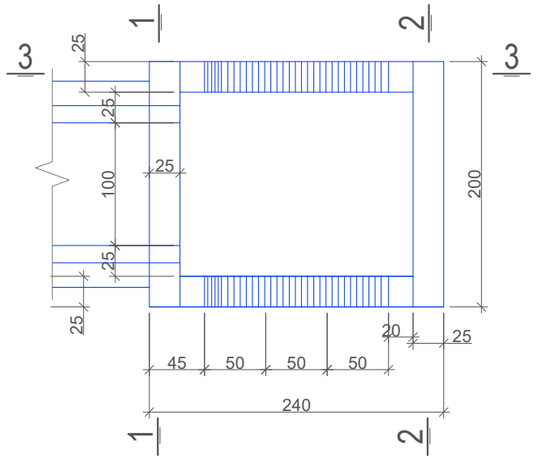

PRERJA/SECTION 3-3 sh./sc.1:50

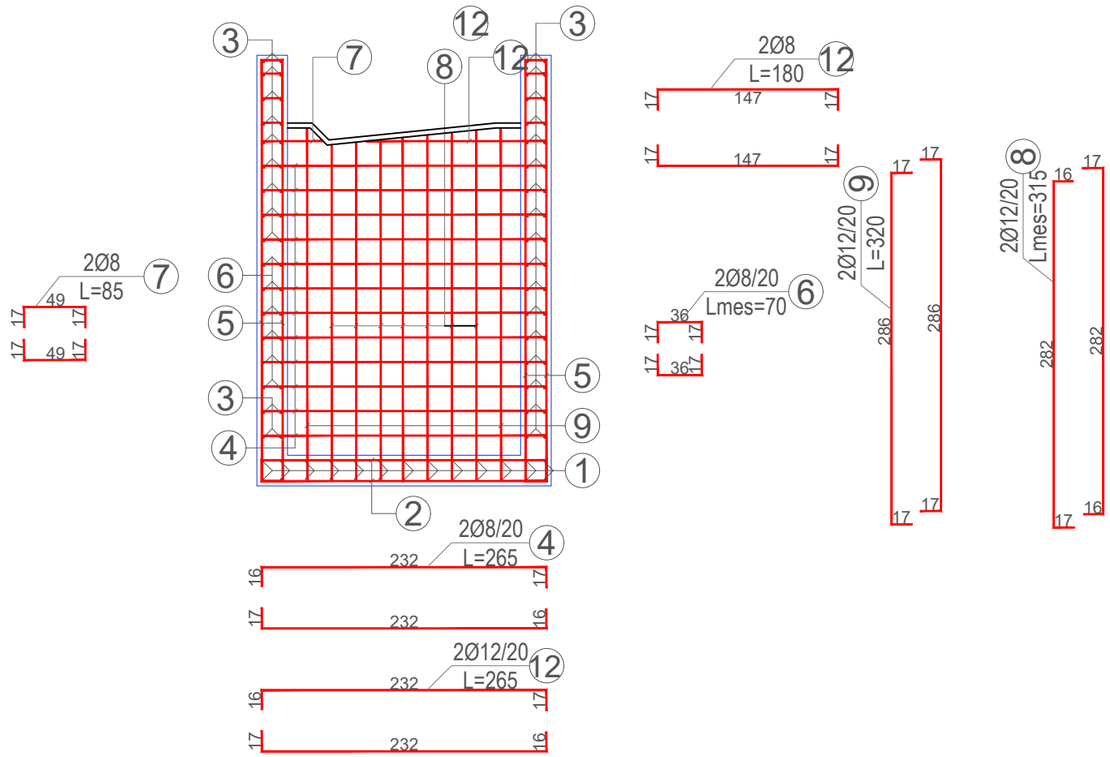

PRERJA/SECTION 1-1 sh./sc.1:50

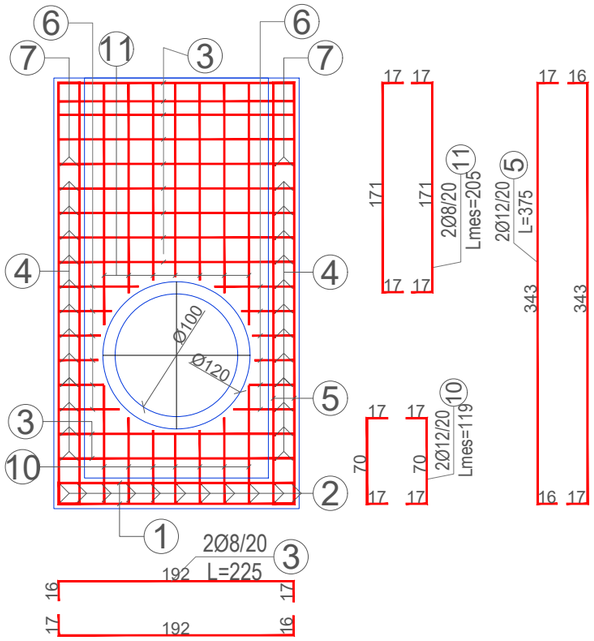

PRERJA/SECTION 2-2 sh./sc.1:50

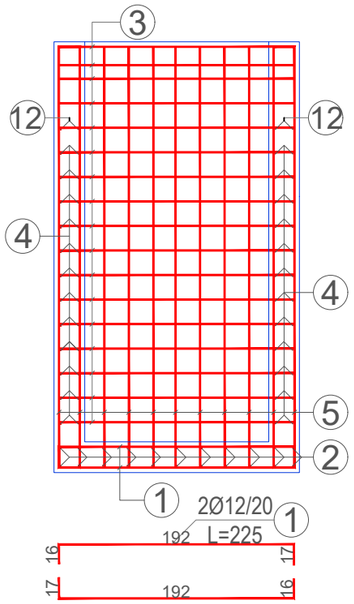

ELEMENTI		SPECIFIKIMI I ARMATURES					SPECIFIKIMET E ELEMANTIT			TOTAL (Kg)
	cope	Poz	Φ	l (cm)	cope	L (m)	Φ	ΣLtot(m)	Pesha (per kg)	
Puseta 1 & 5 & 7	1	1	12	225	26	58.5	6	0	0.222	0
		2	12	265	22	58.3	8	311	0.395	123
		3	8	225	56	126	10	0	0.617	0
		4	8	265	48	127.2	12	358	0.888	317
		5	12	375	30	112.5	14	0	1.208	0
		6	8	70	24	16.8	16	0	1.578	0
		7	8	85	4	3.4	18	0	1.998	0
		8	12	315	28	88.2	20	0	2.466	0
		9	12	320	8	25.6	22	0	2.984	0
		10	12	103	14	14.42	24	0	3.551	0
		11	8	217	14	30.38	25	0	3.853	0
						0				
		12	8	180	4	7.2				
						0				
						0				

PRERJE E PUSETES sh.1:60
MANHOLE SECTION sc.1:60

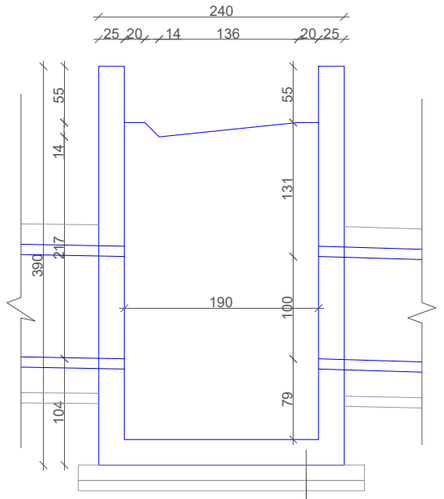

MUR B/A C 25/30
BETON C12/15, T=15CM
ZHAVOR I IMET, T=10CM

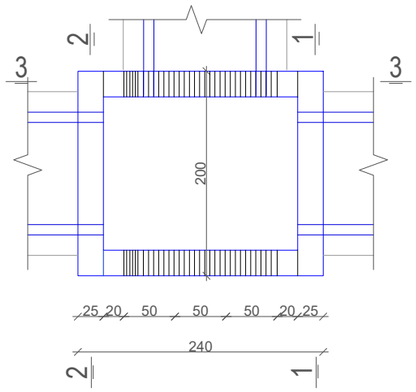

PRERJA/SECTION 1-1 sh./sc.1:60

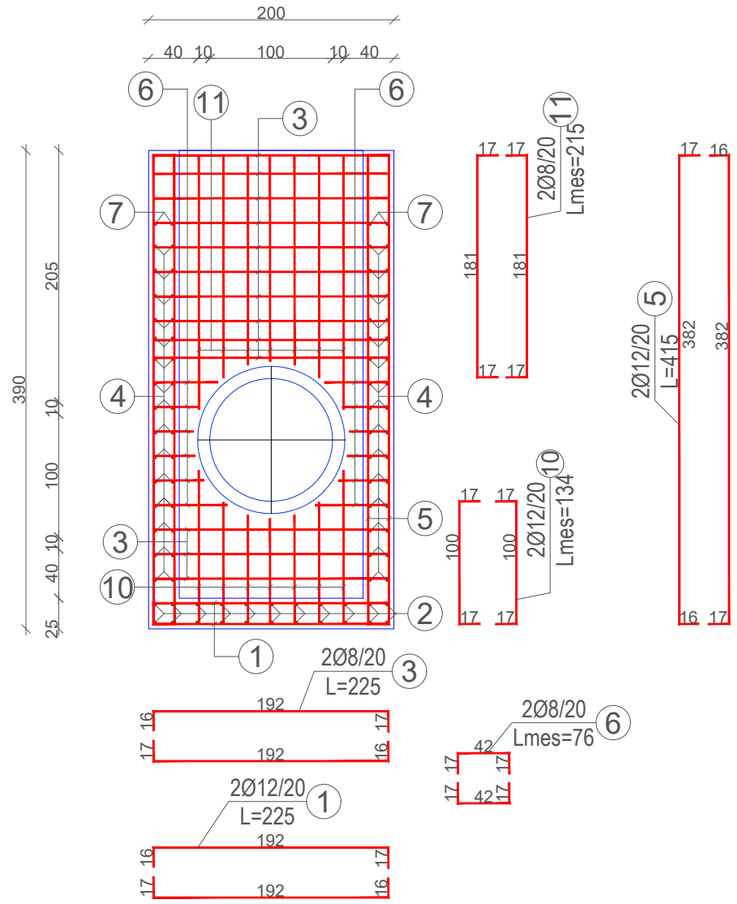

PRERJA/SECTION 3-3 sh./sc.1:60

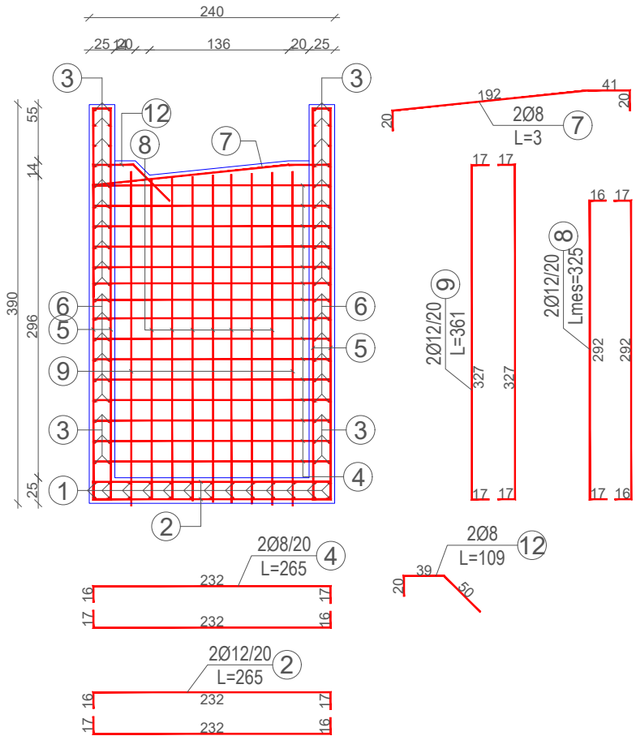

ELEMENTI		SPECIFIKIMI I ARMATURES					SPECIFIKIMI I ELEMENTIT			TOTALI (KG)
Tipi	Cop	Poz	Φ	l (cm)	cope	L (m)	Φ	ΣLtot(m)	Pesha (per kg)	
Armimi I pusetes 3	1	1	12	225	26	58.5	6		0.222	
		2	12	265	22	58.3	8	408	0.395	161
		3	8	225	78	175.5	10		0.617	
		4	8	265	30	79.5	12	299	0.888	266
		5	12	415	16	66.4	14		1.208	
		6	8	76	72	54.72	16		1.578	
		7	8	273	2	5.46	18		1.998	
		8	12	325	14	45.5	20		2.466	
		9	12	361	4	14.44	22		2.984	
		10	12	134	42	56.28	24		3.551	
		11	8	215	42	90.3	25		3.853	
		12	8	109	2	2.18				

F V hekur betoni periodik Ø 6 - 10 mm	kg	161
F V hekur betoni periodik Ø > 10 mm	kg	266
BETON C25/30	m³	7.2
Shtresa C12/15	m³	1.0
Zhavor	m³	0.7

SHËNIME TEKNIKE :

- SHTRESA MBROJTËSE ËSHTË 4CM.
- GJATËSIA MINIMALE E MBIVENDOSJES SË SHUFRAVE ËSHTË 50Ø.
- KLASA E BETONIT ËSHTË C 25/30.
- KLASA E ÇELIKUT ËSHTË B450, FYK = 500 MPA.
- KLASA E BETONIT TË VARFËR ËSHTË C12/15.

TECHNICAL NOTES:

- THE PROTECTIVE LAYER IS 3CM.
- THE MINIMUM LENGTH OF OVERLAP OF BARS IS 50Ø.
- THE CLASS OF CONCRETE IS C 25/30.
- STEEL CLASS IS B450, FYK = 500 MPA.
- THE CLASS OF POOR CONCRETE IS C12/15.

INVESTITORI / INVESTOR
"Autoriteti Rrugor Shqiptar"
Address: Rr. "Sami Frasheri", Nr 33, Tirane
Mob: 04 222 3600
E-mail: info@arrsh.gov.al

JV: "InfraKonsult" shpk & "HMK-Consulting" shpk

"Studim Projektim - Zgjerimi i segmentit rrugor dalje Elbasan-Prrenjas-Qafe Thane", (Faza II) / "Design Study of road segment exit Elbasan-Prrenjas-Qafe Thane" (Phase II)

Armimi i Pusetes 3 / Nr.3 manhole reinforcement - Nyja

FAZA - PROJEKT ZBATIM
PHASE - DETAIL DESIGN

SHKALLA / SCALE 1:60
Data: Mars 2023
Date: march 2023

VIZATIMI Nr: / PAGE No: E (5)

PROJEKTUES: / DESIGN ENGINEERS:
Ing./Eng. Sokol METOJA
Ing./Eng. Redi STRUGA
Ing./Eng. Orgest MËRTIKA

PRERJE E PUSETES sh./sc.1:60

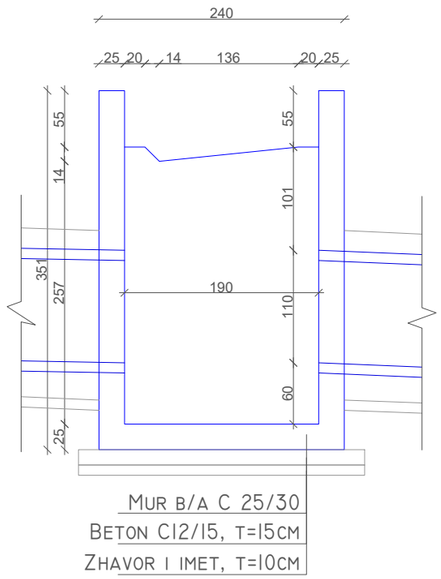

PLANIMETRI E PUSETES sh./sc.1:50

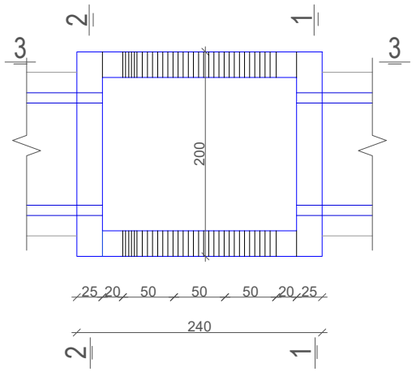

PRERJA/SECTION 1-1 sh./sc.1:50

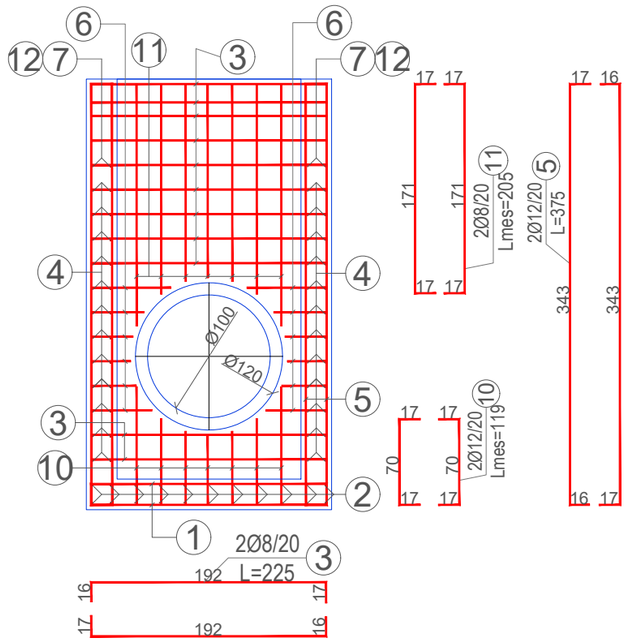

PRERJA/SECTION 3-3 sh./sc.1:60

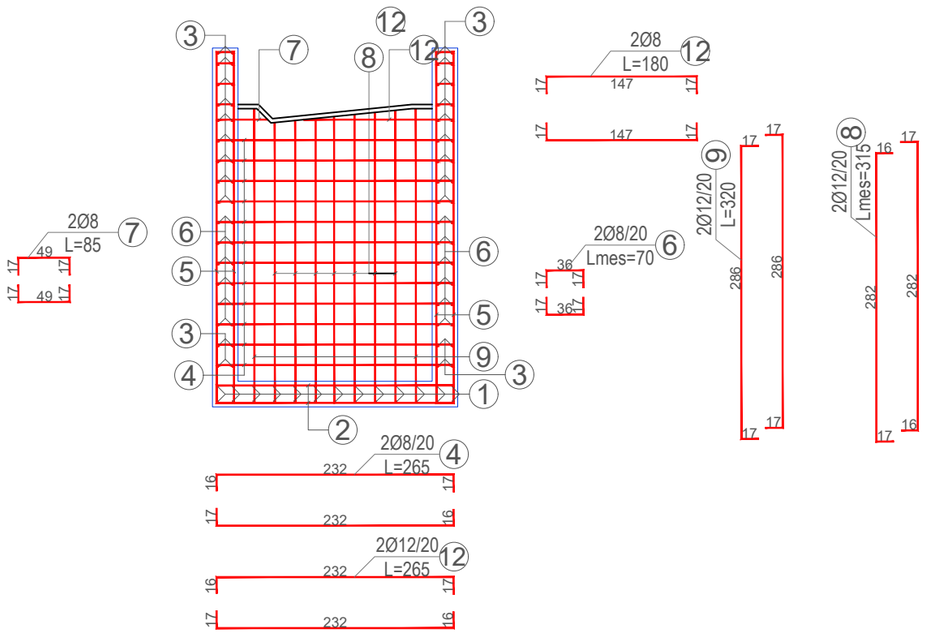

ELEMENTI		SPECIFIKIMI I ARMATURES					SPECIFIKIMI I ELEMENTIT			TOTALI (KG)
Tipi	Cop	Poz	Φ	l (cm)	cope	L (m)	Φ	ΣLtot(m)	Pesha (per kg)	
Armimi i pusetes 3	1	1	12	225	26	58.5	6		0.222	
		2	12	265	22	58.3	8	408	0.395	161
		3	8	225	78	175.5	10		0.617	
		4	8	265	30	79.5	12	299	0.888	266
		5	12	415	16	66.4	14		1.208	
		6	8	76	72	54.72	16		1.578	
		7	8	273	2	5.46	18		1.998	
		8	12	325	14	45.5	20		2.466	
		9	12	361	4	14.44	22		2.984	
		10	12	134	42	56.28	24		3.551	
		11	8	215	42	90.3	25		3.853	
		12	8	109	2	2.18				

F V hekur betoni periodik Ø 6 - 10 mm	kg	161
F V hekur betoni periodik Ø > 10 mm	kg	266
BETON C25/30	m³	7.2
Shtresa C12/15	m³	1.0
Zhavor	m³	0.7

SHËNIME TEKNIKE :

- SHTRESA MBROJTËSE ËSHTË 4CM.
- GJATËSIA MINIMALE E MBIVENDOSJES SË SHUFRAVE ËSHTË 50Ø.
- KLASA E BETONIT ËSHTË C 25/30.
- KLASA E ÇELIKUT ËSHTË B450, FYK = 500 MPA.
- KLASA E BETONIT TË VARFËR ËSHTË C12/15.

TECHNICAL NOTES:

- THE PROTECTIVE LAYER IS 3CM.
- THE MINIMUM LENGTH OF OVERLAP OF BARS IS 50Ø.
- THE CLASS OF CONCRETE IS C 25/30.
- STEEL CLASS IS B450, FYK = 500 MPA.
- THE CLASS OF POOR CONCRETE IS C12/15.

INVESTITORI / INVESTOR
"Autoriteti Rrugor Shqiptar"
Address: Rr. "Sami Frasheri", Nr 33, Tirane
Mob: 04 222 3600
E-mail: info@arrsh.gov.al

JV: "InfraKonsult" shpk & "HMK-Consulting" shpk

"Studim Projektim - Zgjerimi i segmentit rrugor dalje Elbasan-Prrenjas-Qafe Thane", (Faza II) / "Design Study of road segment exit Elbasan-Prrenjas-Qafe Thane" (Phase II)

Armimi i Pusetes 2,6 / Nr.2 & 6 manhole reinforcement - Nyja

FAZA - PROJEKT ZBATIM
PHASE - DETAIL DESIGN

SHKALLA 1:50 / SCALE 1:60 — Data: Mars 2023 / Date: march 2023

VIZATIMI Nr: / PAGE No: E (6)

PROJEKTUES: / DESIGN ENGINEERS:
Ing./Eng. Sokol METOJA
Ing./Eng. Redi STRUGA
Ing./Eng. Orgest MËRTIKA

PRERJE E PUSETES sh./sc.1:60

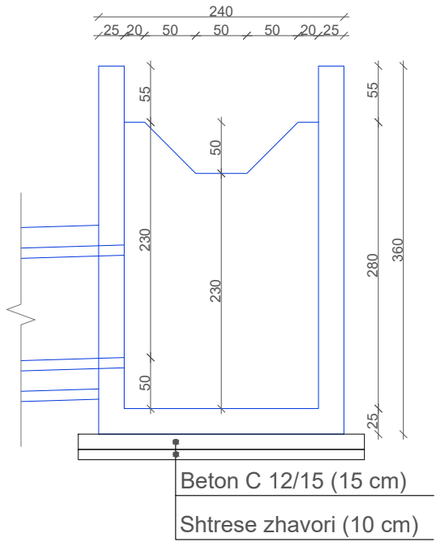

PLANIMETRI E PUSETES sh./sc.1:60

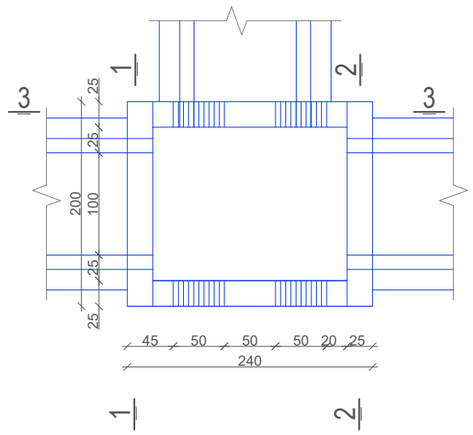

PRERJA/SECTION 3-3 sh./sc.1:50

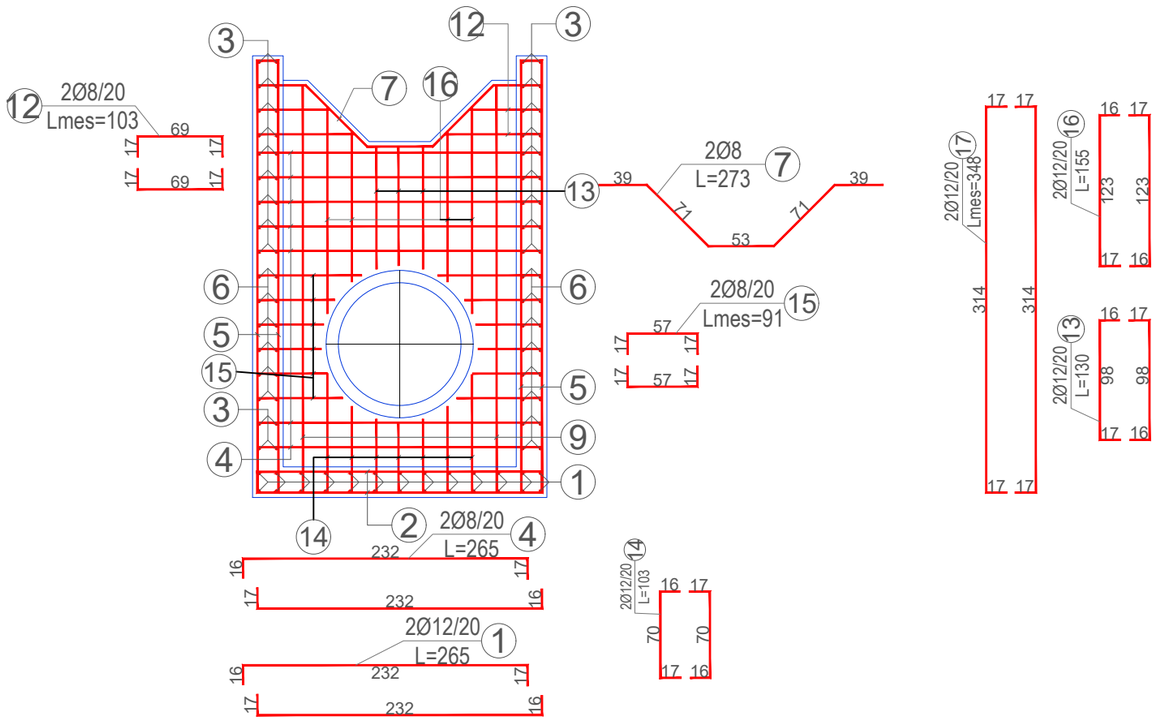

PRERJA/SECTION 1-1 sh./sc.1:50

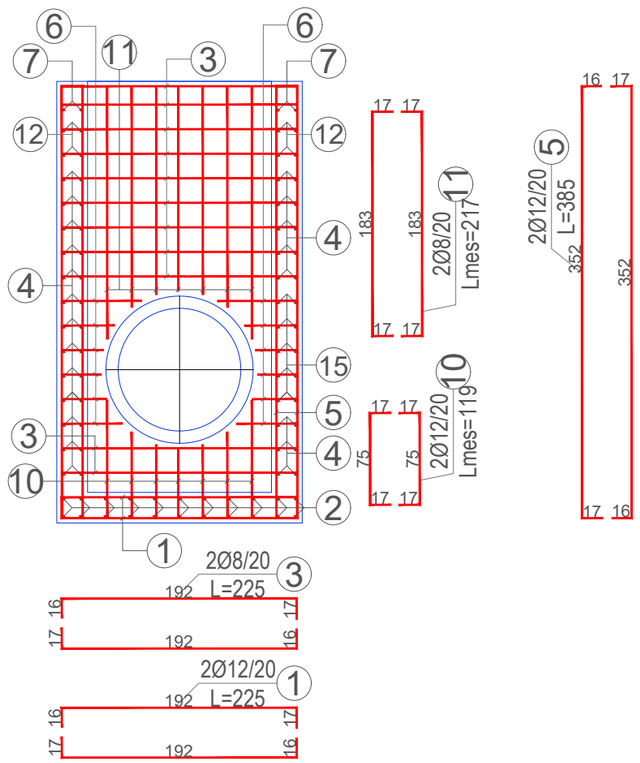

PRERJA/SECTION 3-3 sh./sc.1:60

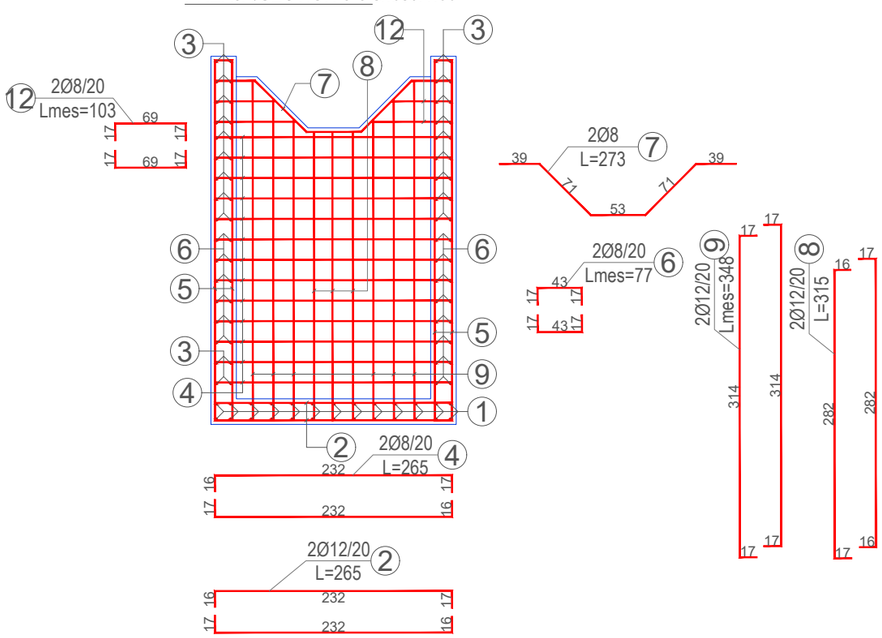

ELEMENTI		SPECIFIKIMI I ARMATURES					SPECIFIKIMET E ELEMANTIT			TOTAL (KG)
	cope	Poz	Φ	l (cm)	cope	L (m)	Φ	ΣLtot(m)	Pesha (per kg)	
Puseta Nr.4	1	1	12	225	30	67.5	6	0	0.222	0
		2	12	265	22	58.3	8	283	0.395	112
		3	8	225	44	99	10	0	0.617	0
		4	8	265	40	106	12	391	0.888	347
		5	12	385	16	61.6	14	0	1.208	0
		6	8	77	48	36.96	16	0	1.578	0
		7	8	273	4	10.92	18	0	1.998	0
		8	12	315	6	18.9	20	0	2.466	0
		9	12	348	12	41.76	22	0	2.984	0
		10	12	119	28	33.32	24	0	3.551	0
		11	12	217	28	60.76	25	0	3.853	0
		12	8	103	8	8.24				
		13	12	130	6	7.8				
		14	12	103	14	14.42				
		15	8	91	24	21.84				
		16	12	155	8	12.4				
		17	12	348	4	13.92				
		Beton C25/30							m3	6.50
		Ø 6 - 10 mm							kg	112
		Ø > 12 mm							kg	347

INVESTITORI / INVESTOR
"Autoriteti Rrugor Shqiptar"
Address: Rr. "Sami Frasheri", Nr 33, Tirane
Mob: 04 222 3600
E-mail: info@arrsh.gov.al

JV: "InfraKonsult" shpk & "HMK-Consulting" shpk

"Studim Projektim - Zgjerimi i segmentit rrugor dalje Elbasan-Prrenjas-Qafe Thane", (Faza II) / "Design Study of road segment exit Elbasan-Prrenjas-Qafe Thane" (Phase II)

Armimi i Pusetes 4/ Nr.5 manhole reinforcement - Nyja

FAZA - PROJEKT ZBATIM
PHASE - DETAIL DESIGN

SHKALLA / SCALE 1:50 1:60

Data: Mars 2023
Date: march 2023

VIZATIMI Nr: / PAGE No: E (7)

PROJEKTUES: / DESIGN ENGINEERS:
Ing./Eng. Sokol METOJA
Ing./Eng. Redi STRUGA
Ing./Eng. Orgest MËRTIKA

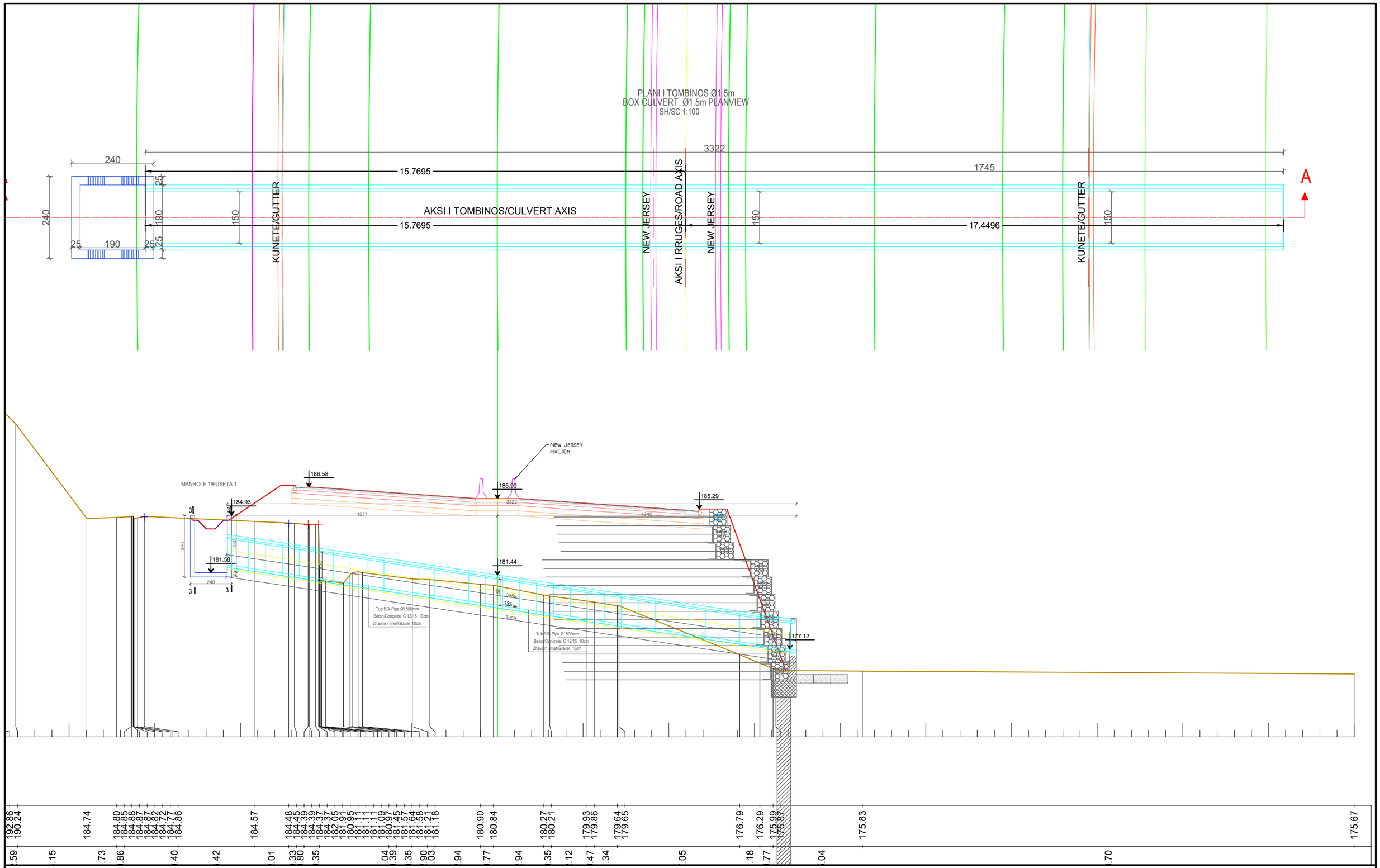

INVESTITORI / INVESTOR

"Autoriteti Rrugor Shqiptar"

Address: Rr. "Sami Frasheri", Nr 33, Tirane

Mob: 04 222 3600
E-mail: info@arrsh.gov.al

JV: "InfraKonsult" shpk & "HMK-Consulting" shpk

"Studim Projektim - Zgjerimi i segmentit rrugor dalje Elbasan-Prrenjas-Qafe Thane", (Faza II) / "Design Study of road segment exit Elbasan-Prrenjas-Qafe Thane" (Phase II)

Plani Tombino Ø1500mm / Pipe Culvert Ø1500mm Planview - Km 6+854.00

FAZA - PROJEKT ZBATIM
PHASE - DETAIL DESIGN

SHKALLA / SCALE	1:200 / 1:100	Data: Mars 2023 / Date: March 2023
VIZATIMI Nr: / PAGE No:	E (1)	

PROJEKTUES:
DESIGN ENGINEERS:

Ing./Eng. Sokol METOJA
Ing./Eng. Redi STRUGA
Ing./Eng. Orgest MËRTIKA

PRERJE TIP 1:50
TYPICAL SECTION

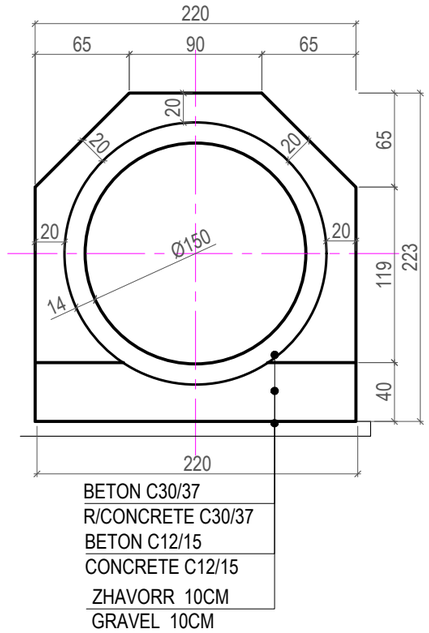

ARMATURA E TUBIT Ø1.5m sh.1:25
(PER MBUSHJE 4.5m)

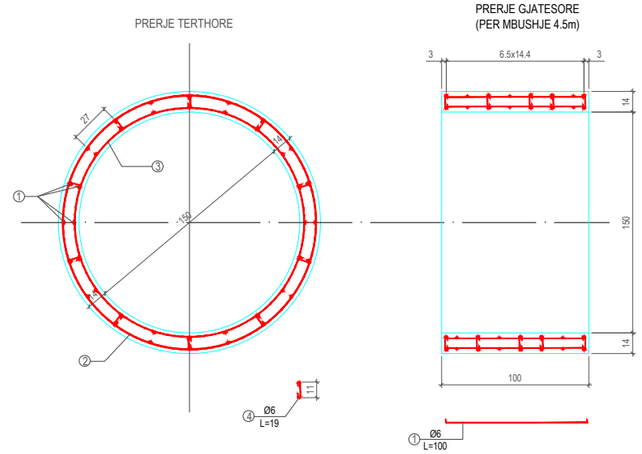

SPIRALJA E JASHTEME

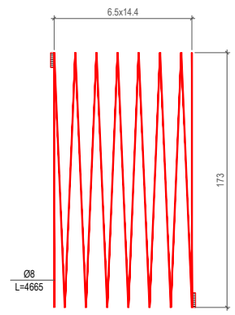

SPIRALJA E BRENDESHME

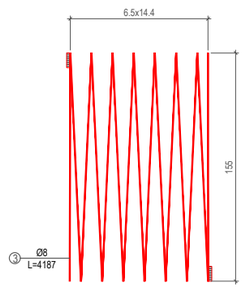

TABELA E HEKURAVE

Ø mm	L cm	SASIA cope	L m	PERMBLEDHJE E ARMATURES Ø mm	ΣL m	PESHA kg/ml	PESHA kg
	100	40	40.00	8	89.00	0.395	35.16
	4665	1	40.65	6	49.50	0.222	11.00
	4235	1	42.35				
	19	50	9.50				
	REINFORCED STEEL KG/1ML SASIA E HEKURIT NE KG/1ML						46.20kg
	REINFORCED STEEL KG/33.22ML SASIA E HEKURIT NE KG/33.22ML						1535kg
	CONCRETE C30/37 FOR CULVERT 33.22ML BETON C30/37 PER TOMBINON PER L=33.22ML						10m3
	CONCRETE C12/15 FOR CULVERT 33.22ML BETONIT C12/15 PER TOMBINON PER L=33.22ML						7m3
	GRAVEL FOR CULVERT L=33.22ML SASIA E ZHAVORRIT PER TOMBINON PER L=33.22ML						7m3

INVESTITORI / INVESTOR
"Autoriteti Rrugor Shqiptar"
Address: Rr. "Sami Frasheri", Nr 33, Tirane
Mob: 04 222 3600
E-mail: info@arrsh.gov.al

JV: "InfraKonsult" shpk & "HMK-Consulting" shpk

"Studim Projektim - Zgjerimi i segmentit rrugor dalje Elbasan-Prrenjas-Qafe Thane", (Faza II) / "Design Study of road segment exit Elbasan-Prrenjas-Qafe Thane" (Phase II)

Armimi i Tombinos Ø1500mm/ Pipe Culvert Ø1500mm Reinforcement - Km 6+854.00

FAZA - PROJEKT ZBATIM
PHASE - DETAIL DESIGN

SHKALLA	*1:50*	*Data: Mars 2023*
SCALE	*1:50*	*Date: March 2023*
VIZATIMI Nr:	*E (2)*	
PAGE No:		

PROJEKTUES:
DESIGN ENGINEERS:
Ing./Eng. Sokol METOJA
Ing./Eng. Redi STRUGA
Ing./Eng. Orgest MËRTIKA

PRERJA E PUSETES/MANHOLE SECTION KM 6+854

PRERJE E PUSETES sh./sc.1:50

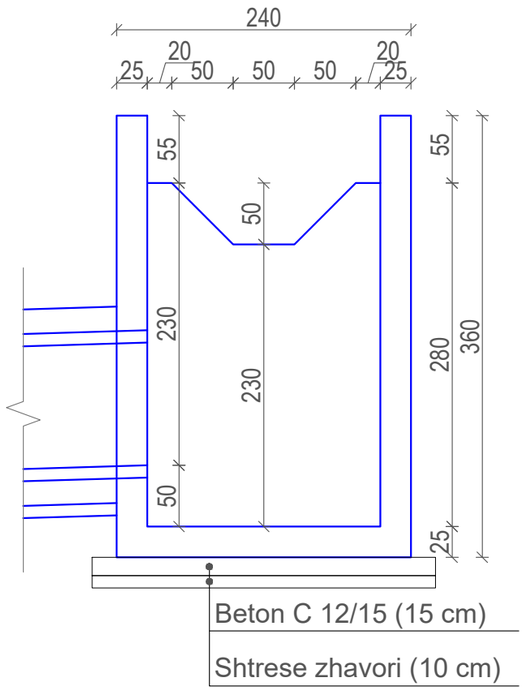

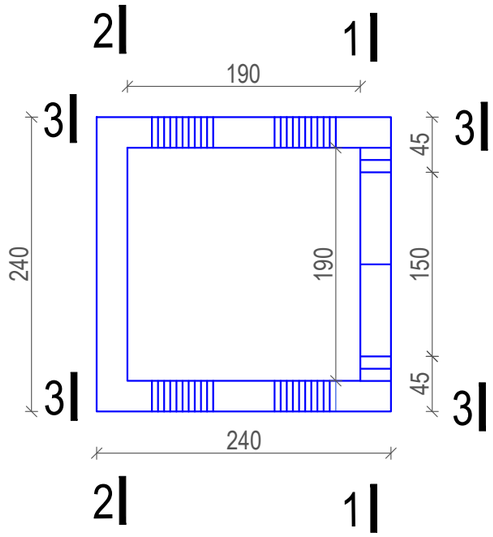

PRERJA/SECTION 1-1
SH/Sc.1:50

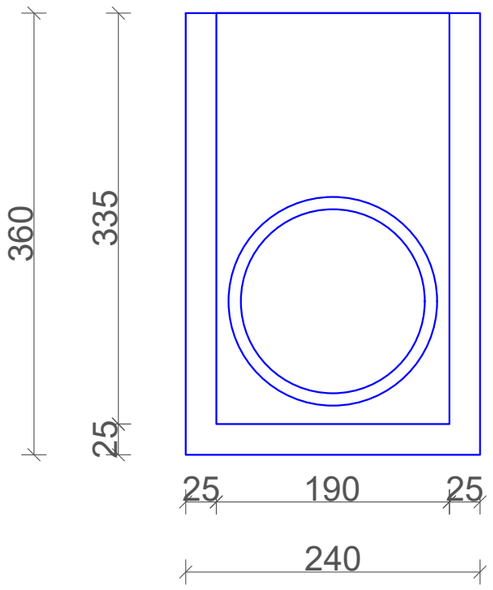

PRERJA/SECTION 2-2
SH/Sc.1:50

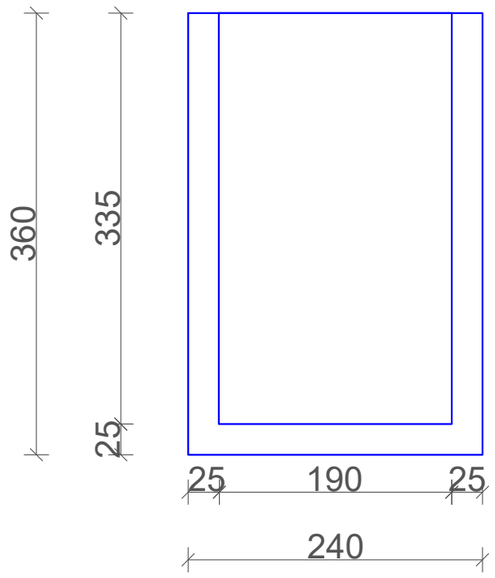

PRERJA/SECTION 3-3
SH/Sc.1:50

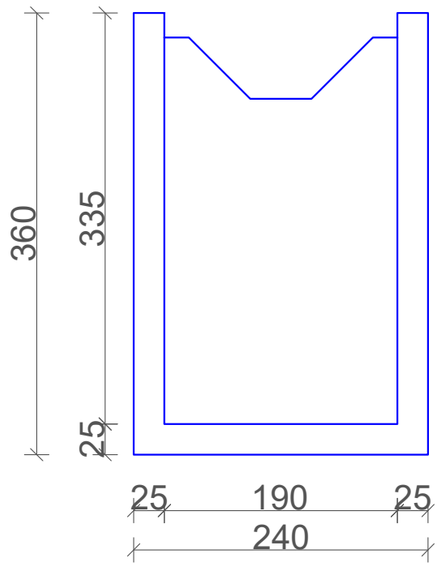

INVESTITORI / INVESTOR
"Autoriteti Rrugor Shqiptar"
Address: Rr. "Sami Frasheri", Nr 33, Tirane
Mob: 04 222 3600
E-mail: info@arrsh.gov.al

JV: "InfraKonsult" shpk & "HMK-Consulting" shpk

"Studim Projektim - Zgjerimi i segmentit rrugor dalje Elbasan-Prrenjas-Qafe Thane", (Faza II) / "Design Study of road segment exit Elbasan-Prrenjas-Qafe Thane" (Phase II)

PRERJA E PUSETES 1 KM+6+854

MANHOLE SECTION 1 KM+6+854

FAZA - PROJEKT ZBATIM
PHASE - DETAIL DESIGN

SHKALLA *SCALE*	*1:50* *1:50*	*Data: Mars 2023* *Date: March 2023*
VIZATIMI Nr: *PAGE No:*	*E (3*	

PROJEKTUES:
DESIGN ENGINEERS:
Ing./Eng. Sokol METOJA
Ing./Eng. Redi STRUGA
Ing./Eng. Orgest MËRTIKA

ARMIMI I PUSETES sh./sc.1:50

PRERJA/SECTION 1-1 sh./sc.1:50

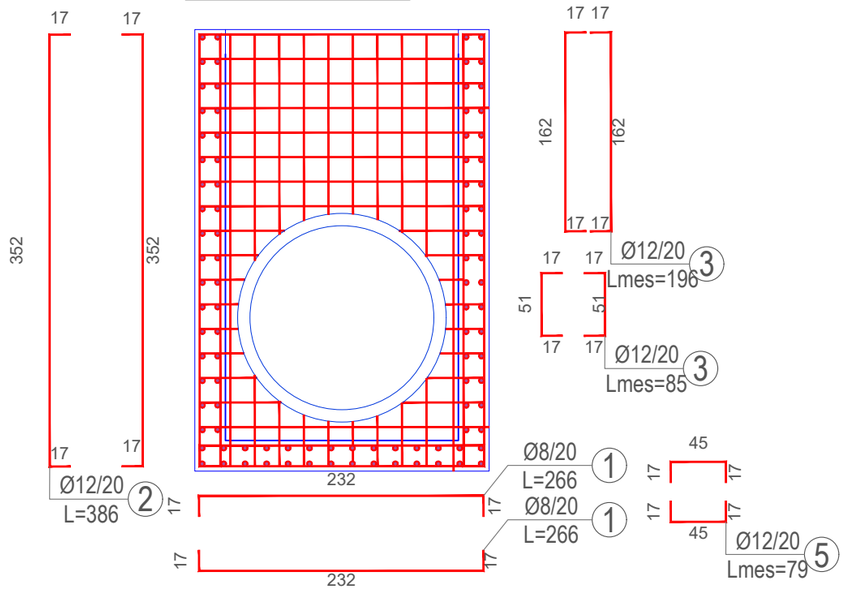

ARMIMI I PUSETES sh./sc.1:50

PRERJA/SECTION 2-2 sh./sc.1:50

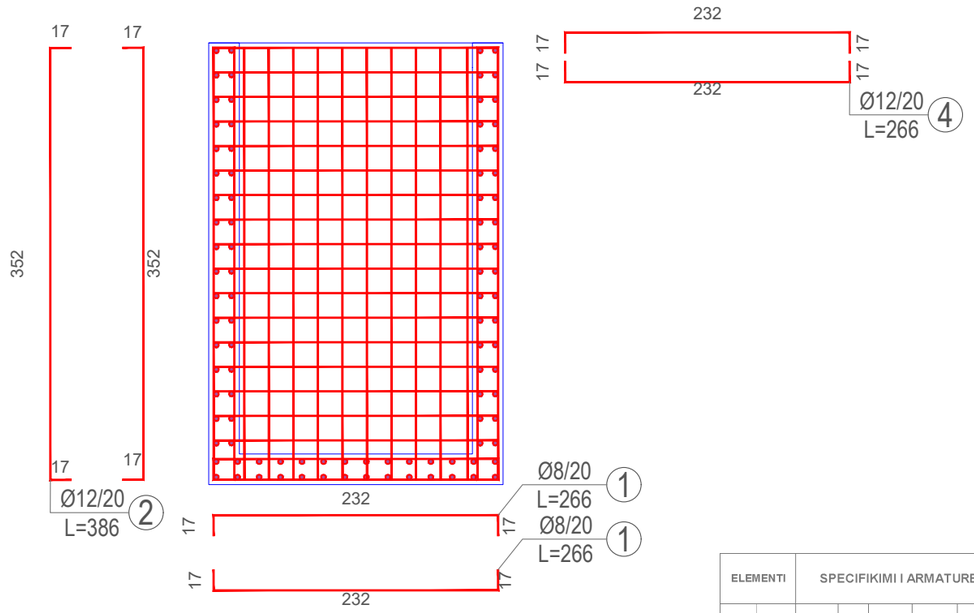

ARMIMI I PUSETES sh./sc.1:50

PRERJA/SECTION 3-3 sh./sc.1:50

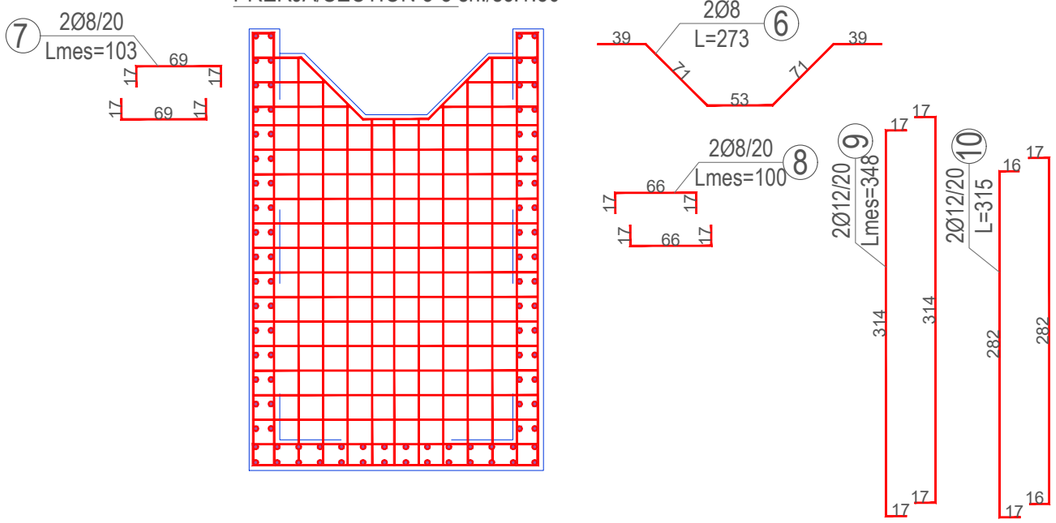

ARMIMI I PUSETES sh./sc.1:50

ARMIMATURA NE PRERJE /SECTION REINFORCMENT ./sc.1:50

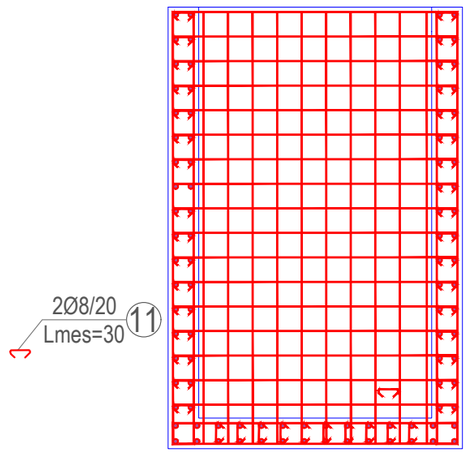

ELEMENTI		SPECIFIKIMI I ARMATURES					SPECIFIKIMI I ELEMENTIT			TOTALI (KG)
Tipi	Cop	Poz	Φ	l (cm)	cope	L (m)	Φ	ΣLtot(m)	Pesha (per kg)	
Puseta 2.4x2.4x3.6	1	1	8	266	56	148.96	6		0.222	
		2	12	386	24	92.64	8	238	0.395	94
		3	12	196	16	31.36	10		0.617	
		4	12	266	52	138.32	12	447	0.888	397
		5	12	79	32	25.28	14		1.208	
		6	8	273	4	10.92	16		1.578	
		7	8	103	12	12.36	18		1.998	
		8	8	100	12	12	20		2.466	
		9	12	348	24	83.52	22		2.984	
		10	12	315	24	75.6	24		3.551	
		11	8	30	180	54	25		3.853	
										491

INVESTITORI / INVESTOR
"Autoriteti Rrugor Shqiptar"
Address: Rr. "Sami Frasheri", Nr 33, Tirane
Mob: 04 222 3600
E-mail: info@arrsh.gov.al

JV: "InfraKonsult" shpk & "HMK-Consulting" shpk

"Studim Projektim - Zgjerimi i segmentit rrugor dalje Elbasan-Prrenjas-Qafe Thane", (Faza II) / "Design Study of road segment exit Elbasan-Prrenjas-Qafe Thane" (Phase II)

ARMIMI I PUSETES 1 KM+6+854

REINFORCMENT OF MANHOLE 1 KM+6+854

FAZA - PROJEKT ZBATIM
PHASE - DETAIL DESIGN

SHKALLA 1:100 / SCALE 1:100 — Data: Mars 2023 / Date: March 2023

VIZATIMI Nr: / PAGE No: E (4)

PROJEKTUES: / DESIGN ENGINEERS:
Ing./Eng. Sokol METOJA
Ing./Eng. Redi STRUGA
Ing./Eng. Orgest MËRTIKA

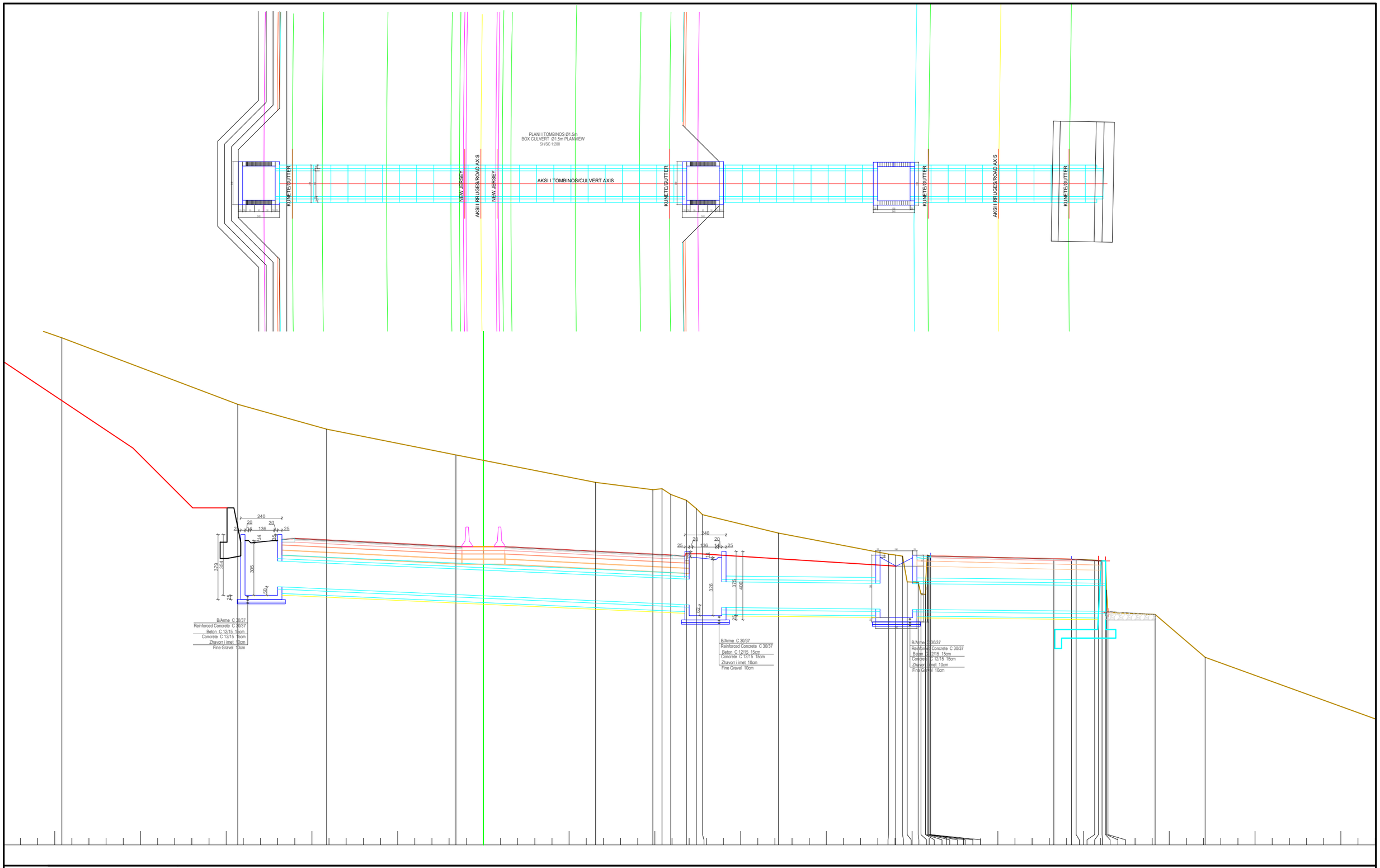

INVESTITORI / INVESTOR

"Autoriteti Rrugor Shqiptar"

Address: Rr. "Sami Frasheri", Nr 33, Tirane

Mob: 04 222 3600
E-mail: info@arrsh.gov.al

JV: "InfraKonsult" shpk & "HMK-Consulting" shpk

"Studim Projektim - Zgjerimi i segmentit rrugor dalje Elbasan-Prrenjas-Qafe Thane", (Faza II) / "Design Study of road segment exit Elbasan-Prrenjas-Qafe Thane" (Phase II)

Tombino Ø1500 mm / Pipe Culvert Ø1500 mm - Km 10+108.00

FAZA - PROJEKT ZBATIM
PHASE - DETAIL DESIGN

SHKALLA / SCALE	1:200	Data: Mars 2023 / Date: march 2023
VIZATIMI Nr: / PAGE No:	E (1)	

PROJEKTUES: / DESIGN ENGINEERS:
Ing./Eng. Sokol METOJA
Ing./Eng. Redi STRUGA
Ing./Eng. Orgest MËRTIKA

PRERJE TIP 1:25
TYPICAL SECTION

ARMATURA E TUBIT Ø1.5m sh.1:25
(PER MBUSHJE 4.5m)
REINFORCEMENT FOR A 4.5m FILL

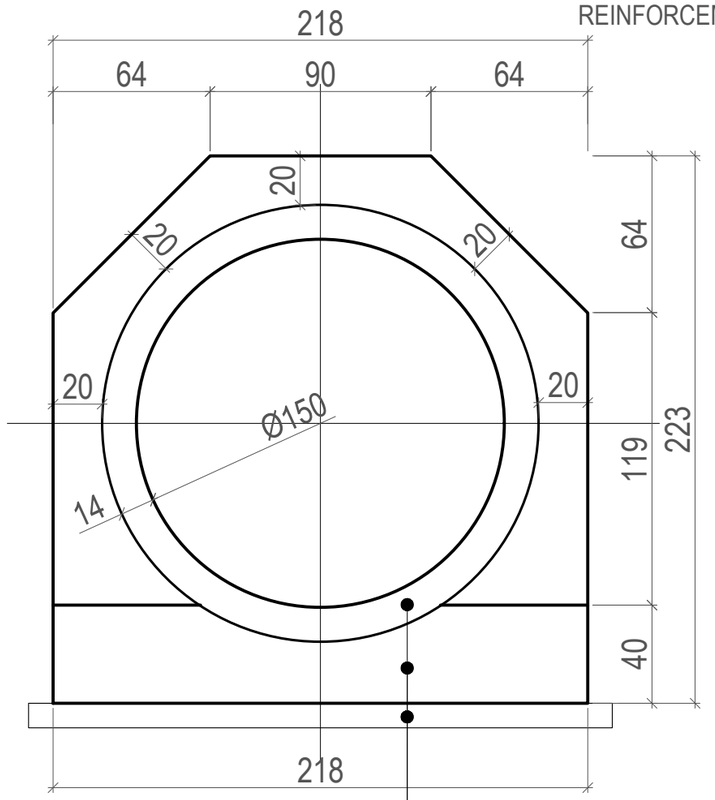

PRERJE TERTHORE
CROSS SECTION

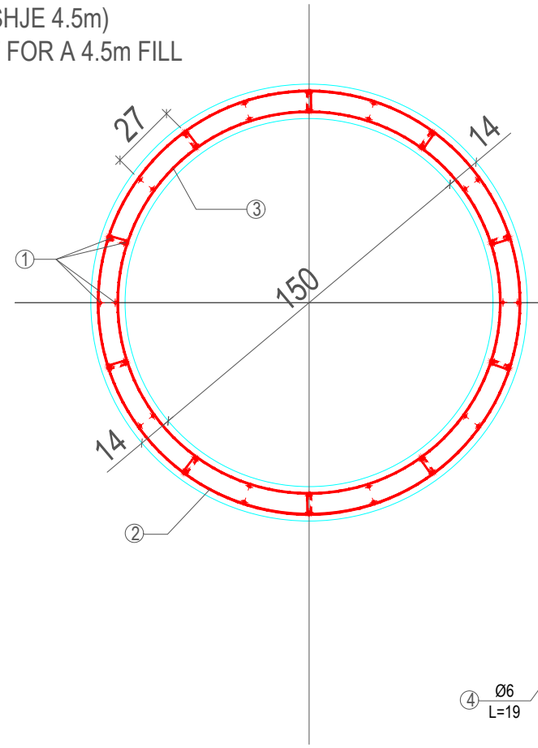

PRERJE GJATESORE
LONGITUDINAL SECTION
(PER MBUSHJE 4.5m)

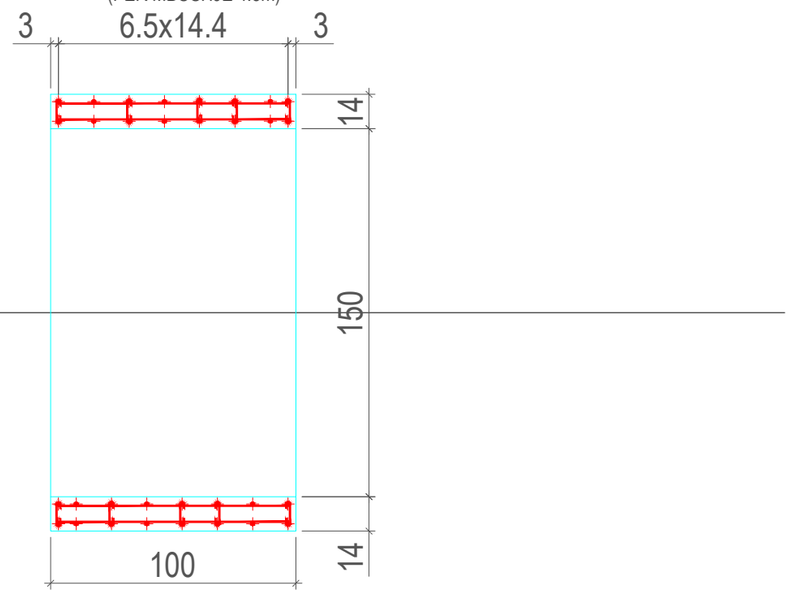

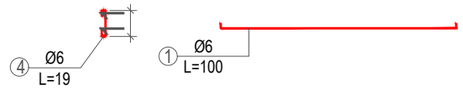

BETON/ARME C30/37
R/CONCRETE C30/37
BETON C12/15
CONCRETE C12/15
ZHAVORR 10CM
GRAVEL 10CM

JASHTEME/OUTER

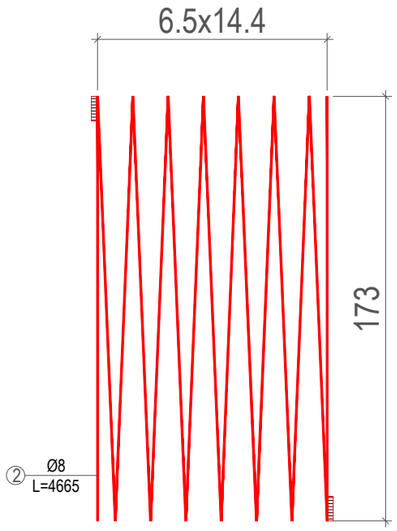

BRENDESHME/INNER

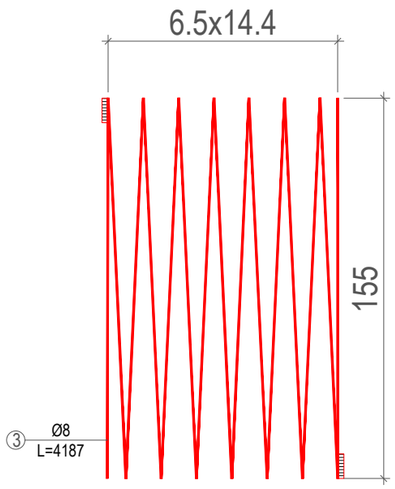

TABELA E HEKURAVE
BAR SPECIFICATION

NR	Ø mm	L cm	SASIA cope	L m	PERMBLEDHJE E ARMATURES			
					Ø mm	ΣL m	PESHA/ WEIGHT kg/ml	PESHA/ WEIGHT kg
1	6	100	40	40.00	8	89.00	0.395	35.16
2	8	4665	1	40.65	6	49.50	0.222	11.00
3	8	4235	1	42.35				
4	6	19	50	9.50				
								46.20

INVESTITORI / INVESTOR
"Autoriteti Rrugor Shqiptar"
Address: Rr. "Sami Frasheri", Nr 33, Tirane
Mob: 04 222 3600
E-mail: info@arrsh.gov.al

JV: "InfraKonsult" shpk & "HMK-Consulting" shpk

"Studim Projektim - Zgjerimi i segmentit rrugor dalje Elbasan-Prrenjas-Qafe Thane", (Faza II) / "Design Study of road segment exit Elbasan-Prrenjas-Qafe Thane" (Phase II)

Armimi i Tombinos Ø1500 mm / Pipe Culvert Ø1500 mm Reinforcement - Km 10+108.00

FAZA - PROJEKT ZBATIM
PHASE - DETAIL DESIGN

SHKALLA SCALE 1:25	*Data: Mars 2023* *Date: march 2023*
VIZATIMI Nr: PAGE No:	*E (2)*

PROJEKTUES:
DESIGN ENGINEERS:
Ing./Eng. Sokol METOJA
Ing./Eng. Redi STRUGA
Ing./Eng. Orgest MËRTIKA

PRERJE E PUSETES sh.1:50
MANHOLE SECTION sc.1:50

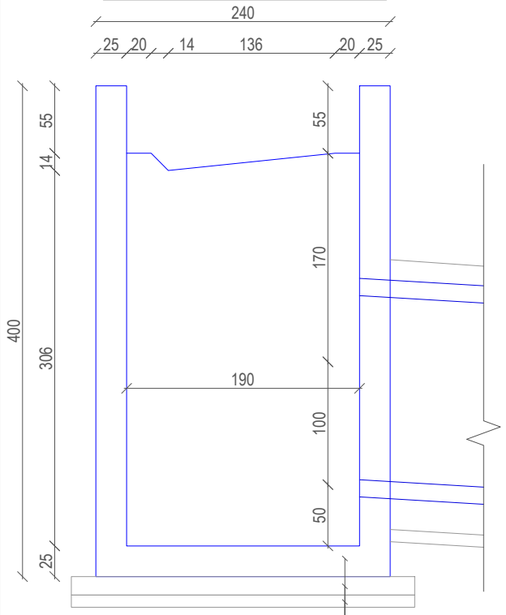

MUR B/A C 25/30
BETON C12/15, T=15CM
ZHAVOR I IMET, T=10CM

PLANIMETRI E PUSETES sh.1:50
MANHOLE PLANVIEW sc.1:50

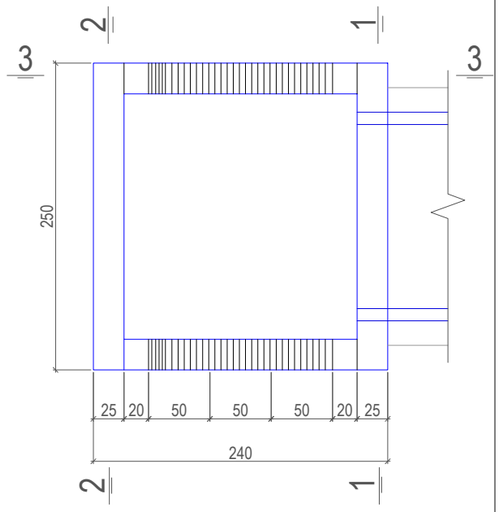

PRERJA/SECTION 1-1 sh./sc.1:50

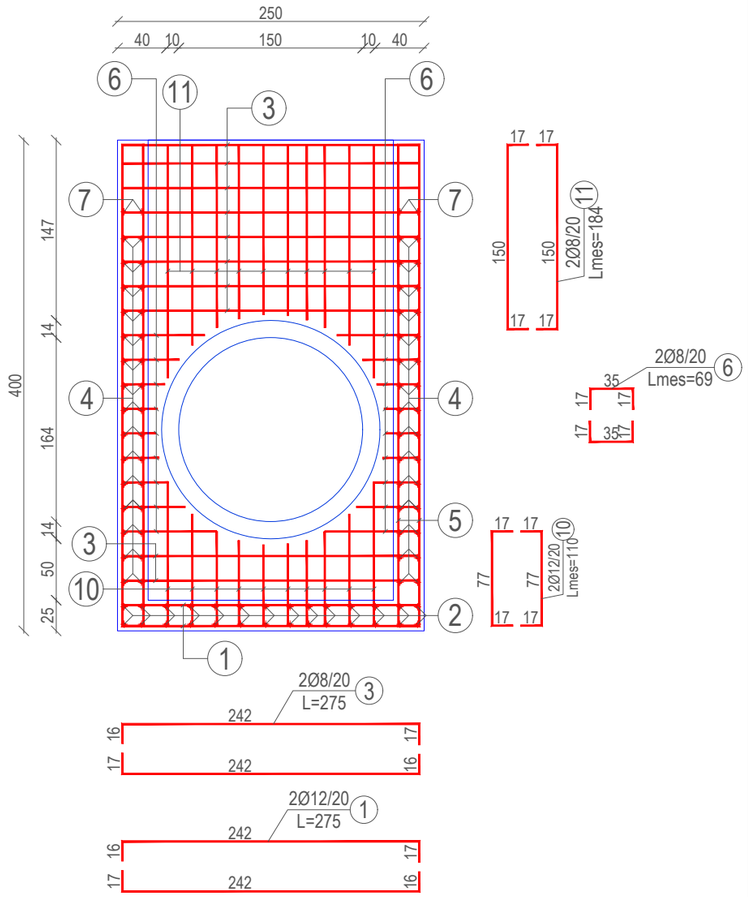

ELEMENTI		SPECIFIKIMI I ARMATURES					SPECIFIKIMI I ELEMENTIT			TOTALI (KG)
Tipi	Cop	Poz	Φ	l (cm)	cope	L (m)	Φ	ΣLtot(m)	Pesha (per kg)	
Armimi I pusetes	1	1	12	275	26	71.5	6		0.222	
		2	12	265	28	74.2	8	392	0.395	155
		3	8	275	58	159.5	10		0.617	
		4	8	265	60	159	12	476	0.888	423
		5	12	425	44	187	14		1.208	
		6	8	69	36	24.84	16		1.578	
		7	8	273	4	10.92	18		1.998	
		8	12	335	28	93.8	20		2.466	
		9	12	370	8	29.6	22		2.984	
		10	12	110	18	19.8	24		3.551	
		11	8	184	18	33.12	25		3.853	
		12	8	110	4	4.4				

F V hekur betoni periodik Ø 6 - 10 mm	kg	155
F V hekur betoni periodik Ø > 10 mm	kg	423
BETON C30/37	m³	8.3
Shtresa C12/15	m³	1.2
Total hekur per 1 pusete	kg	577.1

SHËNIME TEKNIKE :

- SHTRESA MBROJTËSE ËSHTË 4CM.
- GJATËSIA MINIMALE E MBIVENDOSJES SË SHUFRAVE ËSHTË 50Ø.
- KLASA E BETONIT ËSHTË C 30/37.
- KLASA E ÇELIKUT ËSHTË B500C, FYK = 500 MPA.
- KLASA E BETONIT TË VARFËR ËSHTË C12/15.

TECHNICAL NOTES:

- THE PROTECTIVE LAYER IS 3CM.
- THE MINIMUM LENGTH OF OVERLAP OF BARS IS 50Ø.
- THE CLASS OF CONCRETE IS C 30/37.
- STEEL CLASS IS B500C, FYK = 500 MPA.
- THE CLASS OF POOR CONCRETE IS C12/15.

INVESTITORI / INVESTOR
"Autoriteti Rrugor Shqiptar"
Address: Rr. "Sami Frasheri", Nr 33, Tirane
Mob: 04 222 3600
E-mail: info@arrsh.gov.al

JV: "InfraKonsult" shpk & "HMK-Consulting" shpk

"Studim Projektim - Zgjerimi i segmentit rrugor dalje Elbasan-Prrenjas-Qafe Thane", (Faza II) / "Design Study of road segment exit Elbasan-Prrenjas-Qafe Thane" (Phase II)

Armimi i Pusetes Tip 1 / Type 1 manhole Reinforcement - Km 10+108.00

FAZA - PROJEKT ZBATIM
PHASE - DETAIL DESIGN

SHKALLA / SCALE 1:50
Data: Mars 2023
Date: march 2023

VIZATIMI / PAGE Nr: E (3)

PROJEKTUES: / DESIGN ENGINEERS:
Ing./Eng. Sokol METOJA
Ing./Eng. Redi STRUGA
Ing./Eng. Orgest MËRTIKA

ARMIMI I PUSETES sh./sc.1:50

PRERJA/SECTION 2-2 sh./sc.1:50

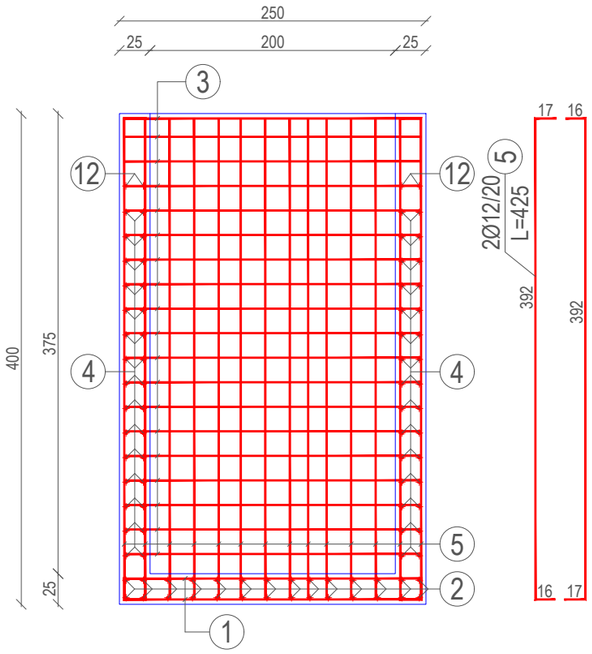

PRERJA/SECTION 3-3 sh./sc.1:50

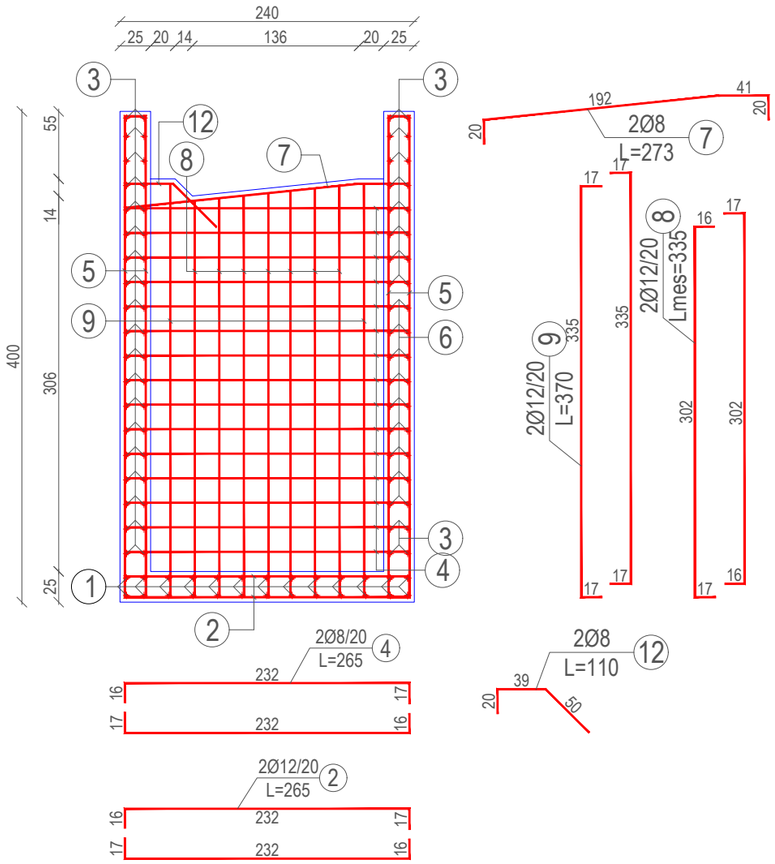

INVESTITORI / INVESTOR **"Autoriteti Rrugor Shqiptar"** **Address:** Rr. "Sami Frasheri", Nr 33, Tirane **Mob:** 04 222 3600 **E-mail:** info@arrsh.gov.al	InfraKonsult konsulence inxhinierike HMK-CONSULTING SH.P.K Konsulence-Projektim-Mbikqyrje ***JV: "InfraKonsult" shpk & "HMK-Consulting" shpk***	***"Studim Projektim - Zgjerimi i segmentit rrugor dalje Elbasan-Prrenjas-Qafe Thane", (Faza II) / "Design Study of road segment exit Elbasan-Prrenjas-Qafe Thane" (Phase II)*** ***Armimi i Pusetes Tip 1 / Type 1 manhole Reinforcement - Km 10+108.00***	FAZA - PROJEKT ZBATIM PHASE - DETAIL DESIGN *SHKALLA / SCALE* 1:50 *Data: Mars 2023 / Date: march 2023* *VIZATIMI / PAGE Nr: / No:* E (4)

PROJEKTUES: / DESIGN ENGINEERS:
Ing./Eng. Sokol METOJA
Ing./Eng. Redi STRUGA
Ing./Eng. Orgest MËRTIKA

PLANIMETRI E PUSETES sh.1:50
(TOMBINO Ø1.5m)

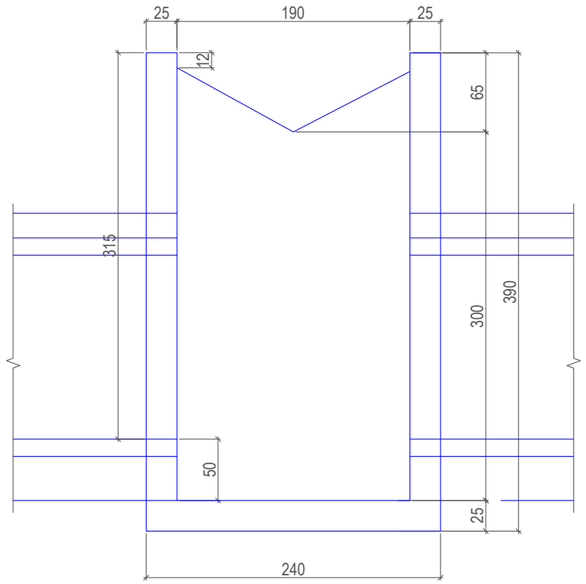

PREMJE E PUSETES sh.1:50
(TOMBINO Ø1.5m)

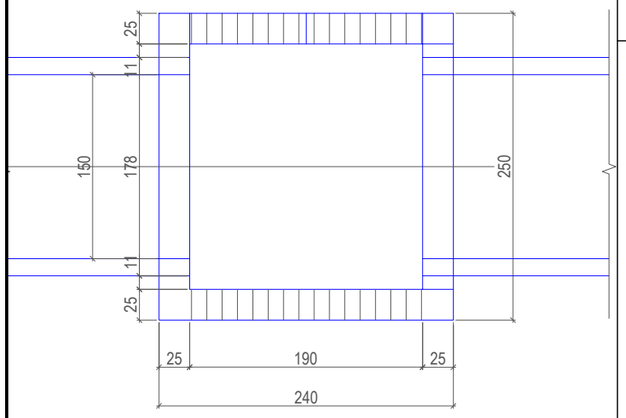

PRERJA 1-1 sh.1:50

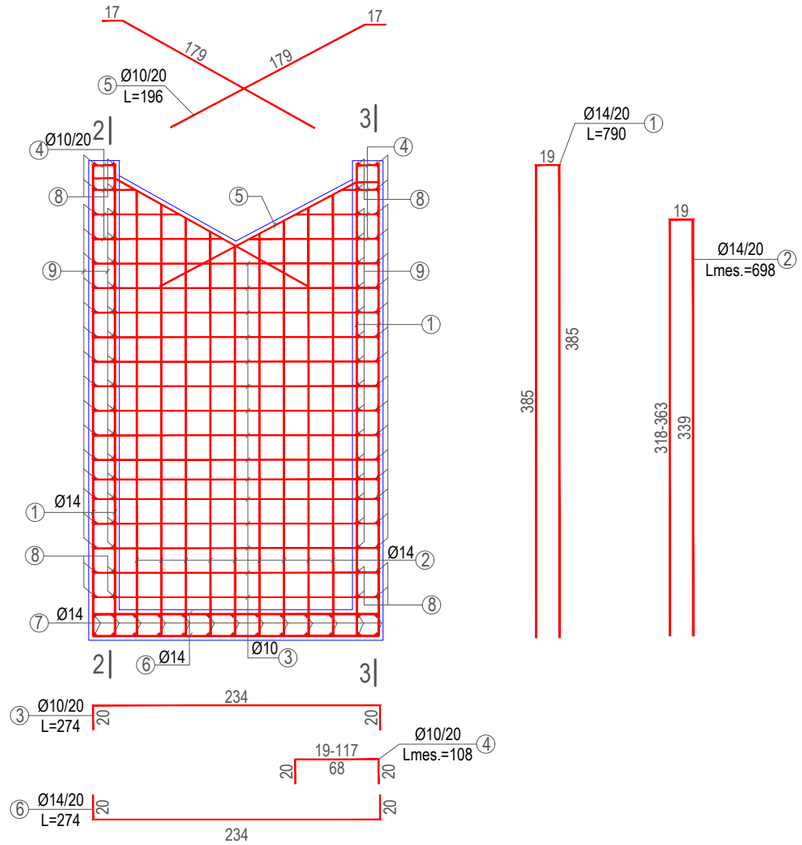

PRERJA 2-2 sh.1:50

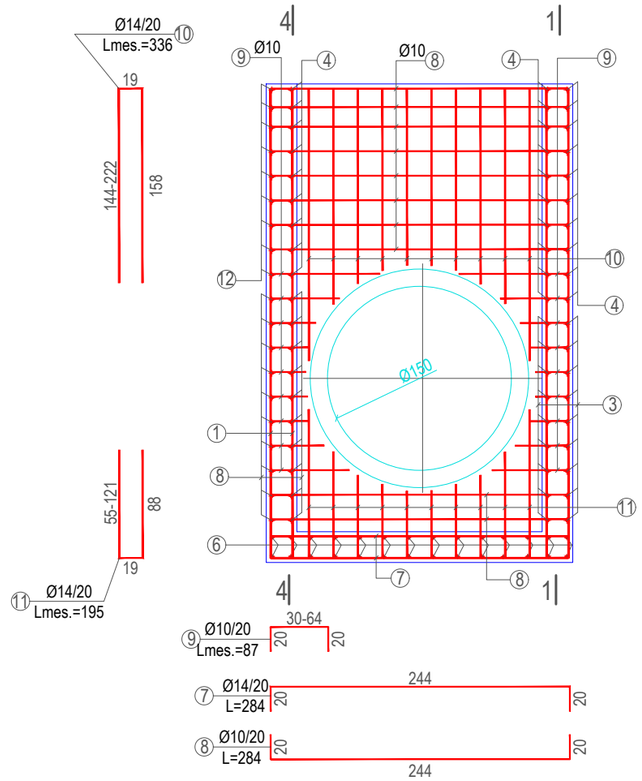

ELEMENTI		SPECIFIKIMI I ARMATURES					SPECIFIKIMI I ELEMENTIT			TOTALI (KG)
Tipi	Cop	Poz	Φ	l (cm)	cope	L (m)	Φ	ΣLtot(m)	Pesha (per kg)	
Armimi i pusetes	1	1	14	790	32	252.8	6		0.222	
		2	14	698	36	251.28	8		0.395	
		3	10	274	60	164.4	10	391	0.617	241
		4	10	108	32	34.56	12		0.888	
		5	10	196	8	15.68	14	867	1.208	1048
		6	14	274	28	76.72	16		1.578	
		7	14	284	26	73.84	18		1.998	
		8	10	284	40	113.6	20		2.466	
		9	10	87	72	62.64	22		2.984	
		10	14	336	40	134.4	24		3.551	
		11	14	195	40	78	25		3.853	

F V hekur betoni periodik Ø 6 - 10 mm	kg	241
F V hekur betoni periodik Ø > 10 mm	kg	1048
BETON C30/37	m³	7.7
Shtresa C12/15	m³	1.2
Total hekur per 1 pusete	kg	1288.7

INVESTITORI / INVESTOR
"Autoriteti Rrugor Shqiptar"
Address: Rr. "Sami Frasheri", Nr 33, Tirane
Mob: 04 222 3600
E-mail: info@arrsh.gov.al

InfraKonsult konsulence inxhinierike
HMK-CONSULTING SH.P.K Konsulence-Projektim-Mbikqyrje
JV: "InfraKonsult" shpk & "HMK-Consulting" shpk

"Studim Projektim - Zgjerimi i segmentit rrugor dalje Elbasan-Prrenjas-Qafe Thane", (Faza II) / "Design Study of road segment exit Elbasan-Prrenjas-Qafe Thane" (Phase II)

Armimi i Pusetes Tip 2 / Type 2 manhole Reinforcement - Km 10+108.00

FAZA - PROJEKT ZBATIM
PHASE - DETAIL DESIGN

SHKALLA / SCALE 1:50
Data: Mars 2023 / Date: march 2023
VIZATIMI Nr: / PAGE No: E (5)

PROJEKTUES: / DESIGN ENGINEERS:
Ing./Eng. Sokol METOJA
Ing./Eng. Redi STRUGA
Ing./Eng. Orgest MËRTIKA

ARMATURA I MURIT B/A sh.1:40
WALL REINFORCEMENT Sc: 1:40

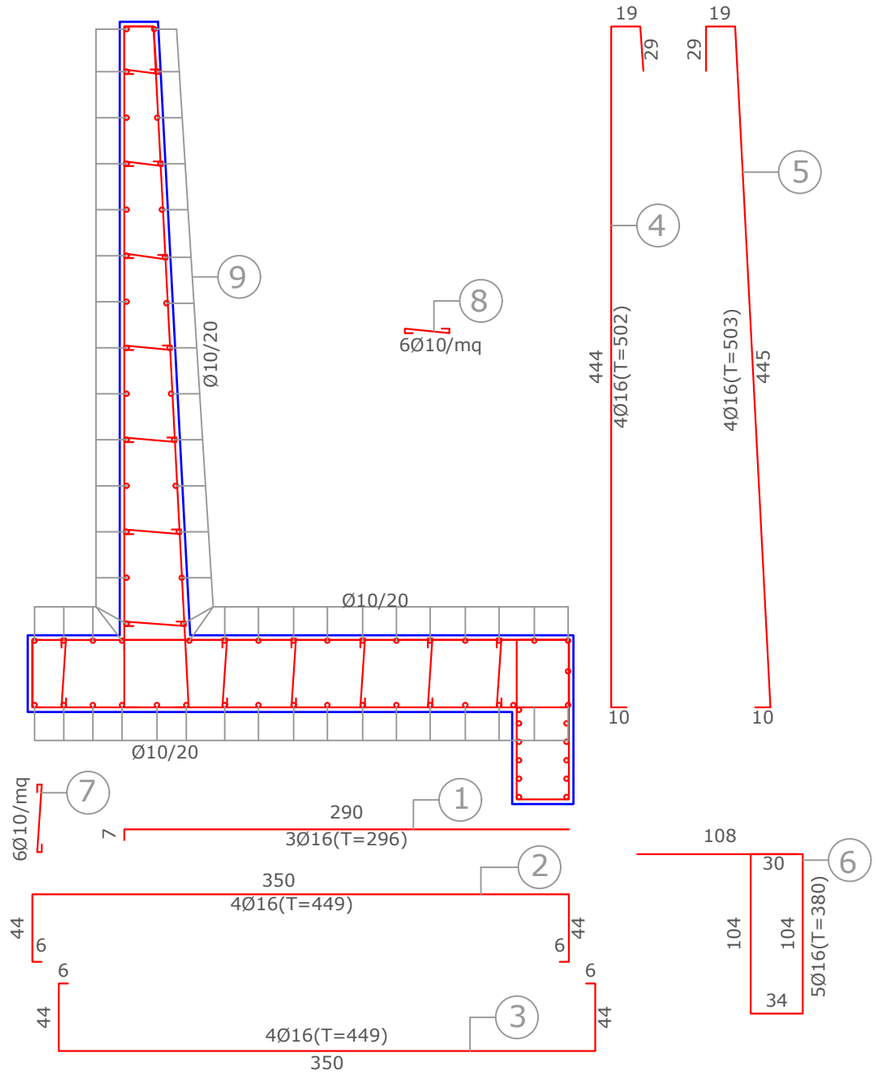

SHENIME:

1- Muri eshte projektuar per:
- ngarkese te levizeshme ne prizmin e shkaterimit q= 2.0 t/m²
- mbushje mbrapa tij me material shkembor me kend te ferkimit te mbrendshem Ø≥35°.
- ngarkese te lejuar ne taban [σ]=2kg/cm² dhe 4kg/cm²

2- Muri eshte parashikuar te ndertohet:
- me beton C30/37
- armature prej celiku B500C, fyk=500Mpa.

3- Largesia nga faqja e betonit deri tek faqja e armatures punuese do te merret 40mm.

4- Permasat e betonit jane dhene ne centimetra(cm),te armatures se hekurit ne centimetra (cm).

5- Detaji i fiksimit te parapetit metalik jepet me projekt te vecante.

Note:

1- This wall is designed for the underlying condition:
- Moving load in the failure wedge q= 2.0 t/m²
- internal friction angle of the backfill Ø≥35°.
- Allowable soil pressure [σ]=2kg/cm²

2- materials:
- Concrete C30/37
- Reinforcment steel b500c, fyk=500MPa.

3- Concrete cover must be 40mm.

4- The Dimension of the wall and of the reinforcment steel are in (cm)

Mur mbajtes H= 4.0 m

	Ø mm	L cm	n cope	n*L m	Ø mm	ΣL m	P kg/ml	P kg
Volumet per 1 ml mur								
1	16	300	3	9	10	144	0.67	96.48
2	16	450	4	18	16	104	1.58	164.32
3	16	450	4	18				
4	16	500	4	20				
5	16	500	4	20				
6	16	380	5	19				
7	10	80	30	24				
8	10	100	30	30	Shuma b500c			260.8
9	10	100	90	90	Beton c30/37			3.5

INVESTITORI / INVESTOR
"Autoriteti Rrugor Shqiptar"
Address: Rr. "Sami Frasheri", Nr 33, Tirane
Mob: 04 222 3600
E-mail: info@arrsh.gov.al

JV: "InfraKonsult" shpk & "HMK-Consulting" shpk

"Studim Projektim - Zgjerimi i segmentit rrugor dalje Elbasan-Prrenjas-Qafe Thane", (Faza II) / "Design Study of road segment exit Elbasan-Prrenjas-Qafe Thane" (Phase II)

Armimi i Murit b/a / Wall Reinforcement - Km 10+108.00

FAZA - PROJEKT ZBATIM
PHASE - DETAIL DESIGN

SHKALLA / SCALE 1:40 — *Data: Mars 2023 / Date: march 2023*

VIZATIMI Nr: / PAGE No: E (6)

PROJEKTUES: / DESIGN ENGINEERS:
Ing./Eng. Sokol METOJA
Ing./Eng. Redi STRUGA
Ing./Eng. Orgest MËRTIKA

Tombino Box/Box Culvert 4x4 m
Planimetria/Planview Sh/Sc 1:400

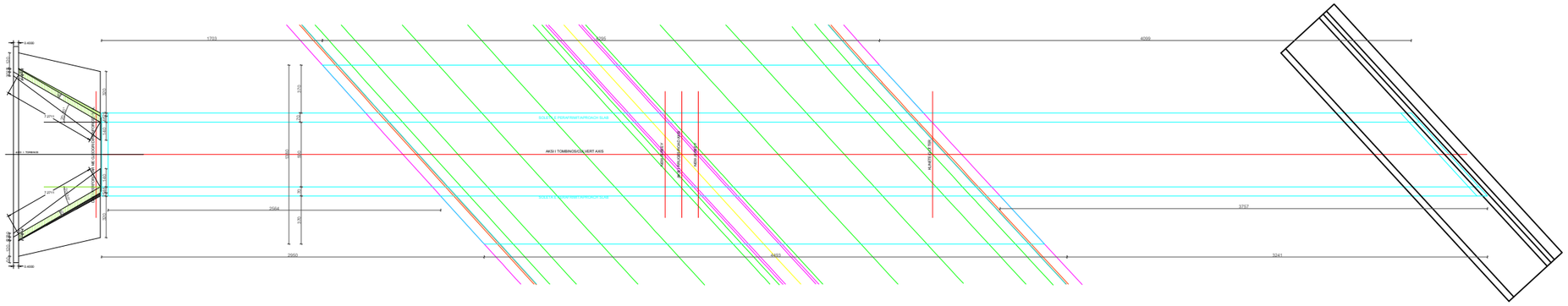

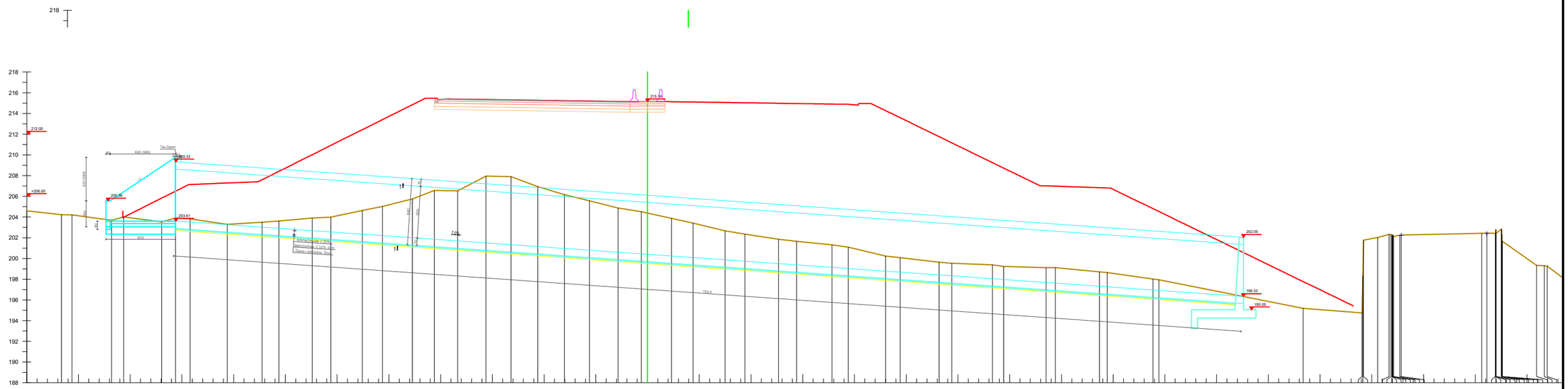

| | | |

PRERJA/SECTION 1-1
Sh/Sc 1:60

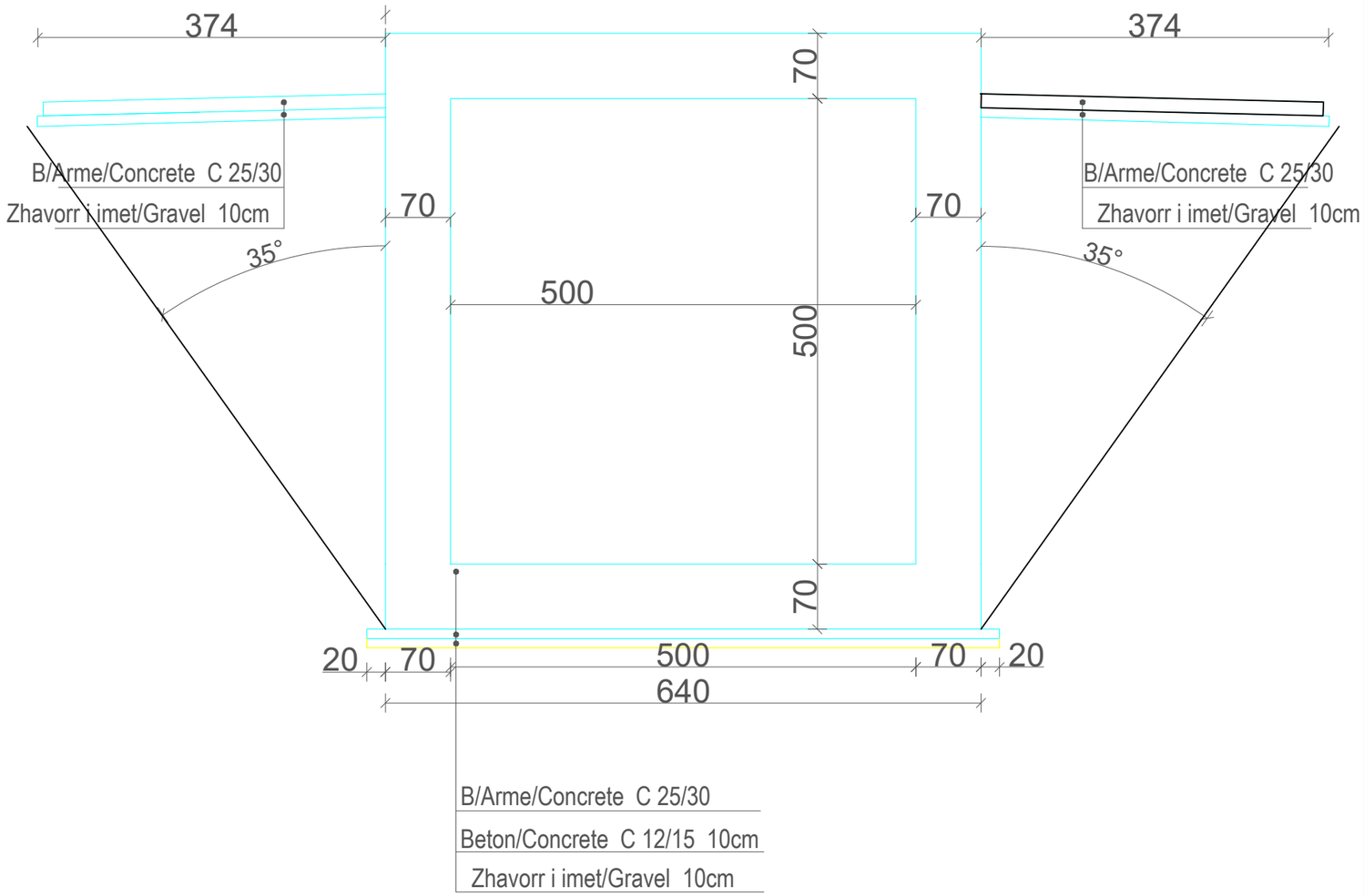

Armimi i Soletes Rakorduse/Approach slab reinforcement
sh./sc. 1:50

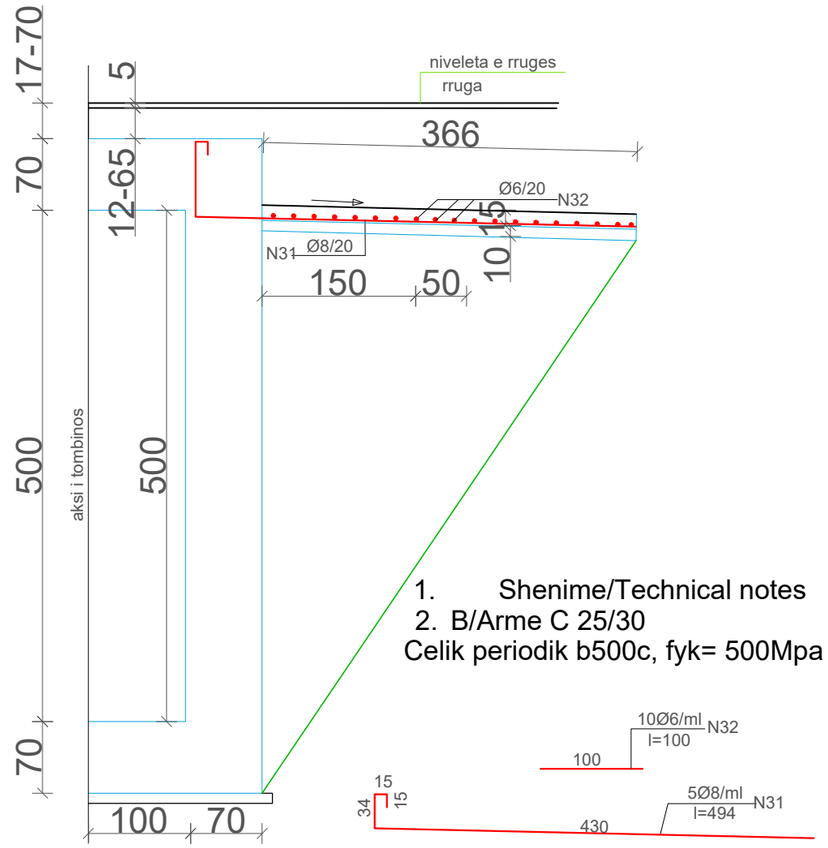

1. Shenime/Technical notes
2. B/Arme C 25/30
Celik periodik b500c, fyk= 500Mpa

Soleta Rakorduese / Approach Slab						
Pozicioni / Position	Sasia (cope) / Pieces	∅ (mm)	L (cm)	Gjatesia Totale (m) / Total Length (m)	Pesha (njesi) / Weight (unit)	Pesha (kg) / Weight (kg)
31	5	8	494	24.70	0.394	10
32	19	6	100	19.00	0.222	4
Σ						13.96
Beton / Concrete m3/ml						0.92

INVESTITORI / INVESTOR
"Autoriteti Rrugor Shqiptar"
Address: Rr. "Sami Frasheri", Nr 33, Tirane
Mob: 04 222 3600
E-mail: info@arrsh.gov.al

JV: "InfraKonsult" shpk & "HMK-Consulting" shpk

"Studim Projektim - Zgjerimi i segmentit rrugor dalje Elbasan-Prrenjas-Qafe Thane", (Faza II) / "Design Study of road segment exit Elbasan-Prrenjas-Qafe Thane" (Phase II)

Prerja e Tombino Kuti 5.0 x 5.0 m,Armimi i soletes rakorduese / Box Culvert 5.0 x 5.0 m cross section, Approach slab reinforcement - Km 8+766.35

FAZA - PROJEKT ZBATIM
PHASE - DETAIL DESIGN

SHKALLA / SCALE 1:60
Data: Mars 2023
Date: march 2023
VIZATIMI / PAGE Nr: E (2)

PROJEKTUES: / DESIGN ENGINEERS:
Ing./Eng. Sokol METOJA
Ing./Eng. Redi STRUGA
Ing./Eng. Orgest MËRTIKA

ARMIMI I TOMBINOS KUTI 5.0 m x 5.0 m (PER 1ml) Sh 1:60

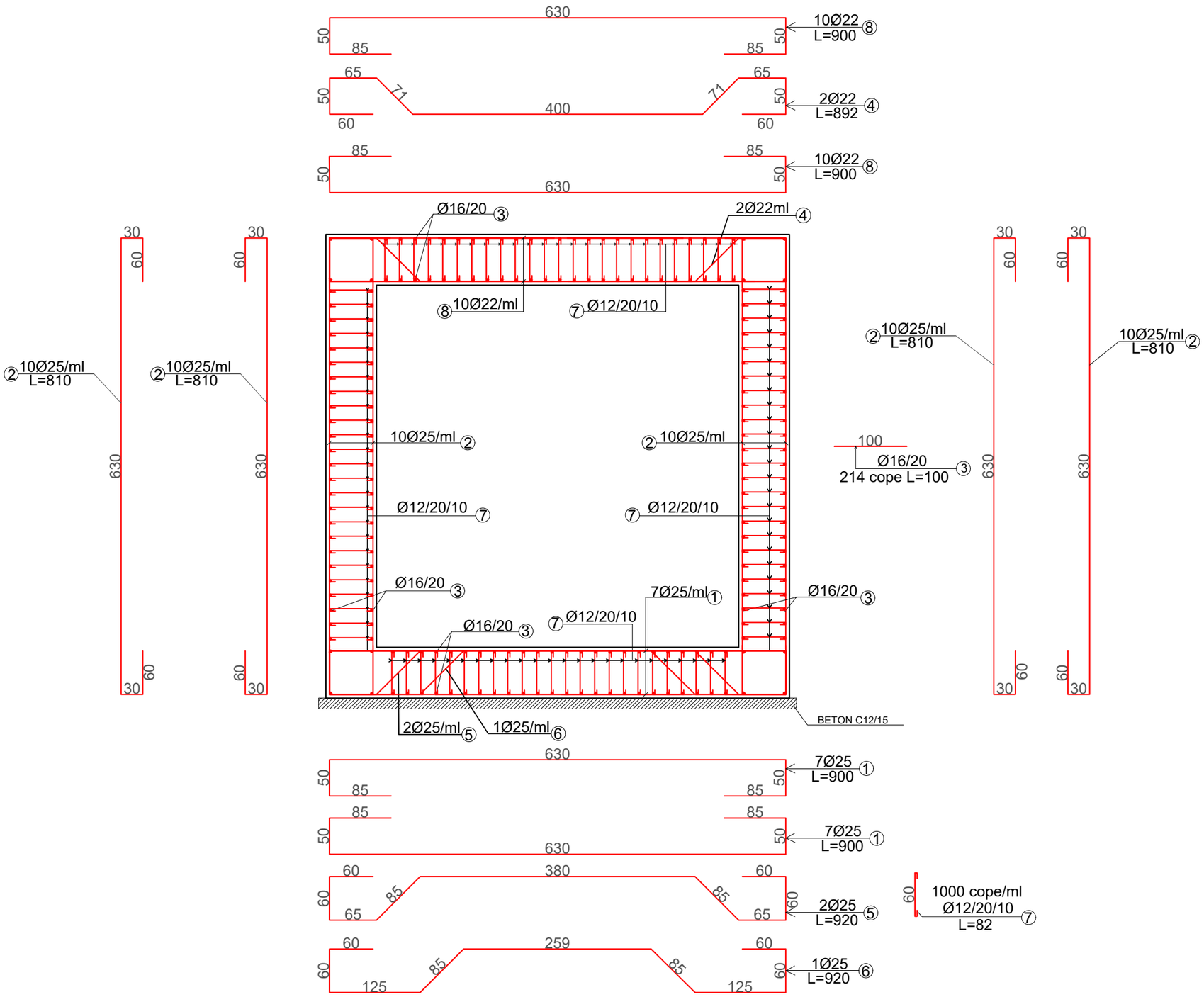

ELEMENTI		SPECIFIKIMI I ARMATURES					SPECIFIKIMI I ELEMENTIT			TOTALI *(KG)*
Tipi	Cope ml	Poz	Φ	l (cm)	cope	L (m)	Φ	ΣLtot*(m)*	Pesha *(per kg)*	
Tombino 5.0m x 5.0m	1	1	25	900	14	126	***6***		*0.222*	
							8		*0.395*	
		2	25	810	40	324	***10***		*0.617*	
		3	16	100	214	214	***12***	720	*0.888*	639
		4	22	892	2	17.84	***14***		*1.208*	
		5	25	920	2	18.4	***16***	214	*1.578*	338
		6	25	920	1	9.2	***18***		*1.998*	
		7	12	72	1000	720	***20***		*2.466*	
		8	22	900	20	180	***22***	198	*2.984*	590
							24		*3.551*	
							25		*3.853*	1840
									Kg/ 1 ml	**3408**
		BETON C30/37 per 103.4ml							m3	1650
		BETON C12/15 per 103.4ml							m3	102

MATERIALET

TOMBINO KUTI : B/ARME C30/37

SHTRESE E VARFER : BETON C12/15

HEKURI: B500C, fyk=500MPa

SHTRESA MBROJTESE 5-10cm

CONCRETE COVER 5-10cm

INVESTITORI / INVESTOR

"Autoriteti Rrugor Shqiptar"

Address: Rr. "Sami Frasheri", Nr 33, Tirane

Mob: 04 222 3600

E-mail: info@arrsh.gov.al

JV: "InfraKonsult" shpk & "HMK-Consulting" shpk

"Studim Projektim - Zgjerimi i segmentit rrugor dalje Elbasan-Prrenjas-Qafe Thane", (Faza II) / "Design Study of road segment exit Elbasan-Prrenjas-Qafe Thane" (Phase II)

Armimi i tombinos Kuti 5.0 x 5.0 m / Box Culvert 5.0 x 5.0 m Reinforcement - Km 8+766.35

FAZA - PROJEKT ZBATIM
PHASE - DETAIL DESIGN

SHKALLA / SCALE *1:60* — *Data: Mars 2023* / *Date: march 2023*

VIZATIMI Nr: / PAGE No: *E (3)*

PROJEKTUES: / DESIGN ENGINEERS:

Ing./Eng. Sokol METOJA
Ing./Eng. Redi STRUGA
Ing./Eng. Orgest MËRTIKA

ARMIMI I MURIT B/A Sh: 1:60
REINFORCED CONCRETE WALL Sc: 1:60

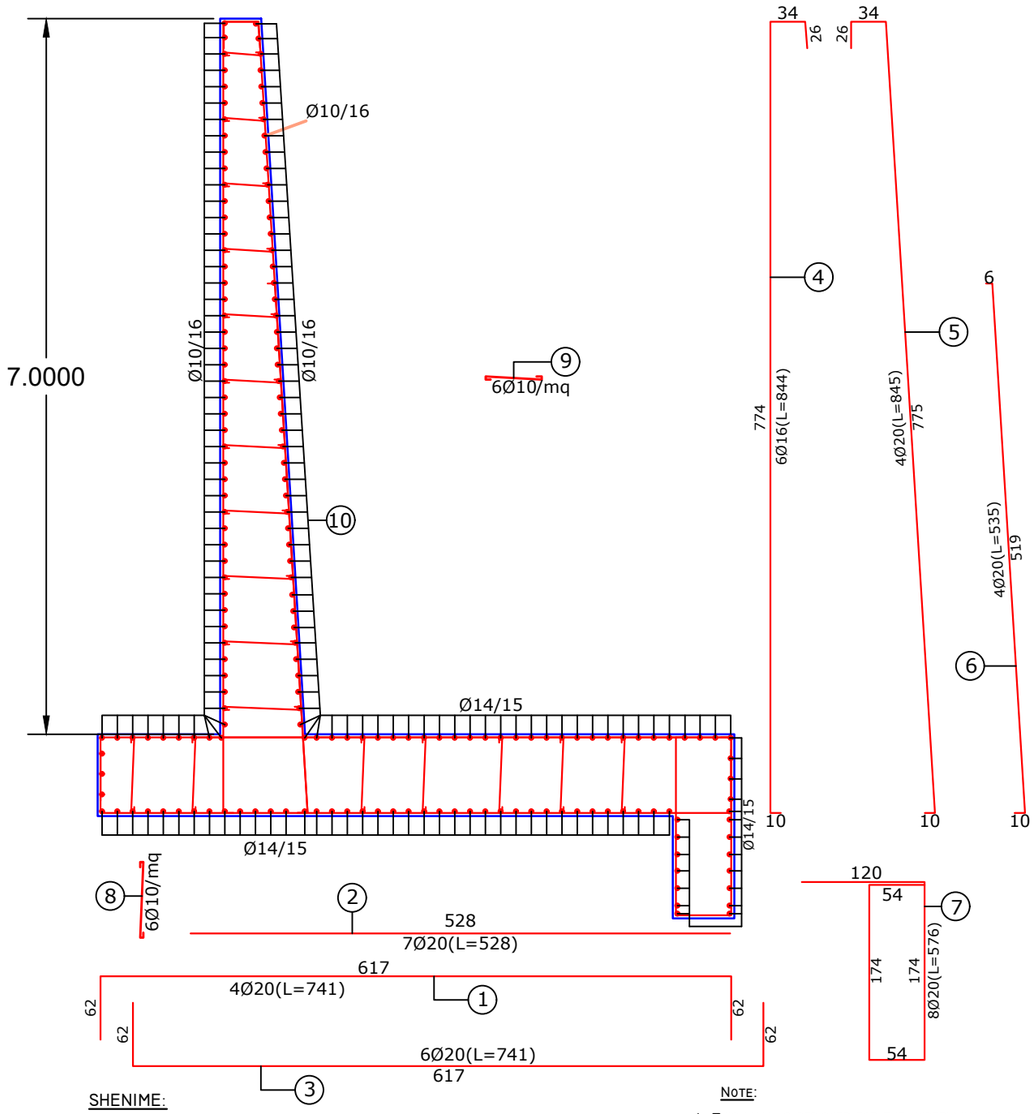

Mur mbajtes H= 7.0 m (nen skarpat)		Ø mm	L cm	n cope	n*L m	Ø mm	ΣL m	P kg/ml	P kg
	Volumet per 1 ml mur								
	1	20	741	4	29.64	10	69.6	0.667	46.42
	2	20	528	7	36.96	12	285	0.89	253.65
	3	20	741	6	44.46	16	50.64	1.58	80.01
	4	16	844	6	50.64	20	212.34	2.46	522.36
	5	20	845	4	33.8				
	6	20	535	4	21.4				
	7	20	576	8	46.08				
	8	10	100	36	36	Shuma B500C			902.44
	9	10	80	42	33.6	Beton C25/30			9.9
	10	10	100	285	285				

SHENIME:

1- Muri eshte projektuar per:
- ngarkese te levizeshme ne prizmin e shkaterimit q= 2.0 T/m²
- mbushje mbrapa tij me material shkembor me kend te ferkimit te mbrendshem Ø≥35°.
- ngarkese te lejuar ne taban [σ]=2kg/cm²

2- Muri eshte parashikuar te ndertohet:
- me beton C30/37
- armature prej celiku b500c, Fyk=500 MPa.

3- Largesia nga faqja e betonit deri tek faqja e armatures punuese do te merret 40mm.

4- Permasat e betonit jane dhene ne centimetra(cm),te armatures se hekurit ne centimetra (cm).

NOTE:

1- This wall is designed for the underlying condition:
- Moving load in the failure wedge q= 2.0 T/m²
- Internal friction angle of the backfill Ø≥35°.
- Allowable soil pressure [σ]=2kg/cm²

2- Materials:
- Concrete C30/37
- Reinforcment steel b500c, Fyk=500 MPa.

3- Concrete cover must be 40mm.

4- The Dimension of the wall and of the reinforcment steel are in (cm)

INVESTITORI / INVESTOR
"Autoriteti Rrugor Shqiptar"
Address: Rr. "Sami Frasheri", Nr 33, Tirane
Mob: 04 222 3600
E-mail: info@arrsh.gov.al

JV: "InfraKonsult" shpk & "HMK-Consulting" shpk

"Studim Projektim - Zgjerimi i segmentit rrugor dalje Elbasan-Prrenjas-Qafe Thane", (Faza II) / "Design Study of road segment exit Elbasan-Prrenjas-Qafe Thane" (Phase II)

Armimi i murit b/a ne dalje / Outlet wall reinforcement - Km 8+766.35

FAZA - PROJEKT ZBATIM
PHASE - DETAIL DESIGN

SHKALLA / SCALE 1:60
Data: Mars 2023
Date: march 2023

VIZATIMI Nr: / PAGE No: E (4)

PROJEKTUES: / DESIGN ENGINEERS:
Ing./Eng. Sokol METOJA
Ing./Eng. Redi STRUGA
Ing./Eng. Orgest MËRTIKA

Armimi i speronave per tombinon 5x5m SH. I:60
Wall Reinforcement Sc. I:60

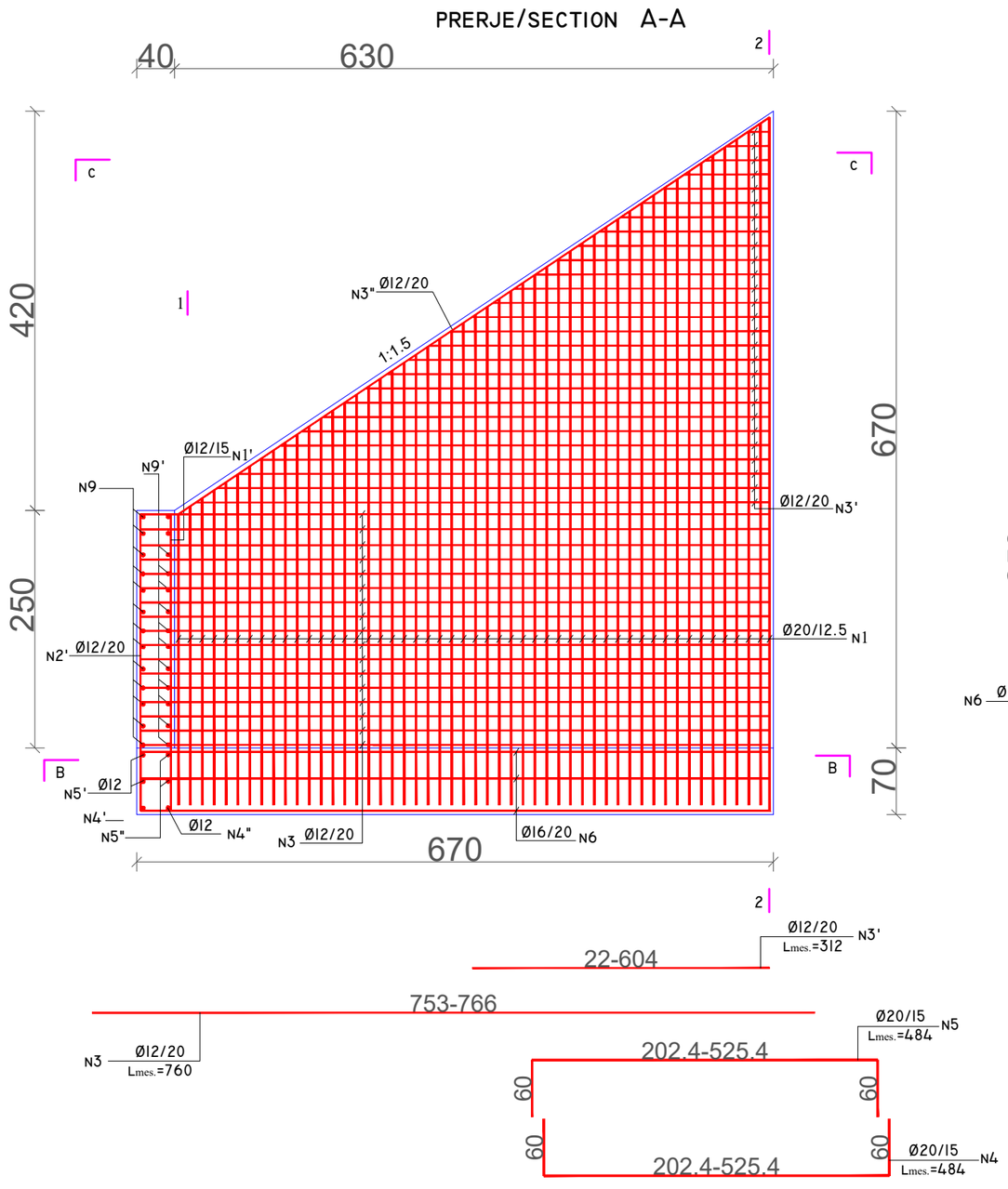

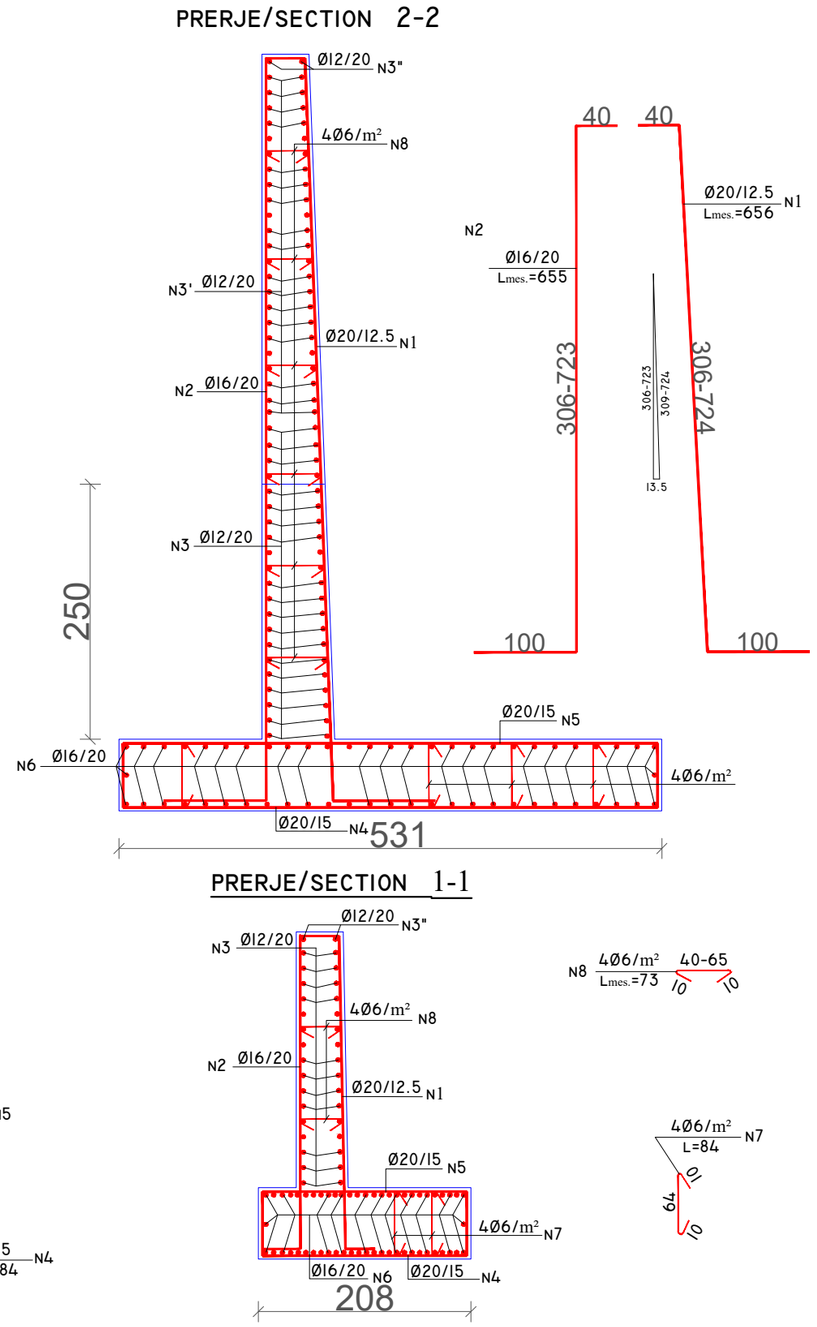

INVESTITORI / INVESTOR
"Autoriteti Rrugor Shqiptar"
Address: Rr. "Sami Frasheri", Nr 33, Tirane
Mob: 04 222 3600
E-mail: info@arrsh.gov.al

JV: "InfraKonsult" shpk & "HMK-Consulting" shpk

"Studim Projektim - Zgjerimi i segmentit rrugor dalje Elbasan-Prrenjas-Qafe Thane", (Faza II) / "Design Study of road segment exit Elbasan-Prrenjas-Qafe Thane" (Phase II)

Armimi i mureve b/a ne hyrje / Inlet walls reinforcement - Km 8+766.35

FAZA - PROJEKT ZBATIM
PHASE - DETAIL DESIGN

SHKALLA / SCALE	1:60	Data: Mars 2023 / Date: march 2023
VIZATIMI / PAGE	Nr: / No: E (5)	

PROJEKTUES:
DESIGN ENGINEERS:
Ing./Eng. Sokol METOJA
Ing./Eng. Redi STRUGA
Ing./Eng. Orgest MËRTIKA

PRERJE/SECTION B-B

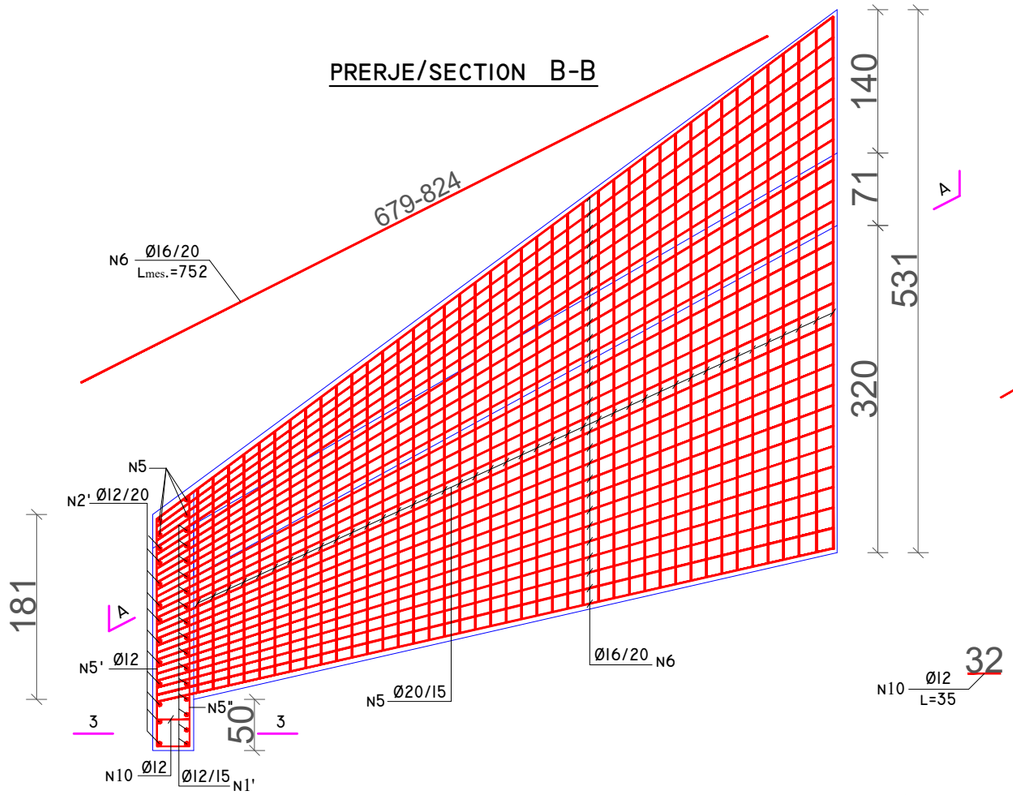

PRERJE/SECTION C-C

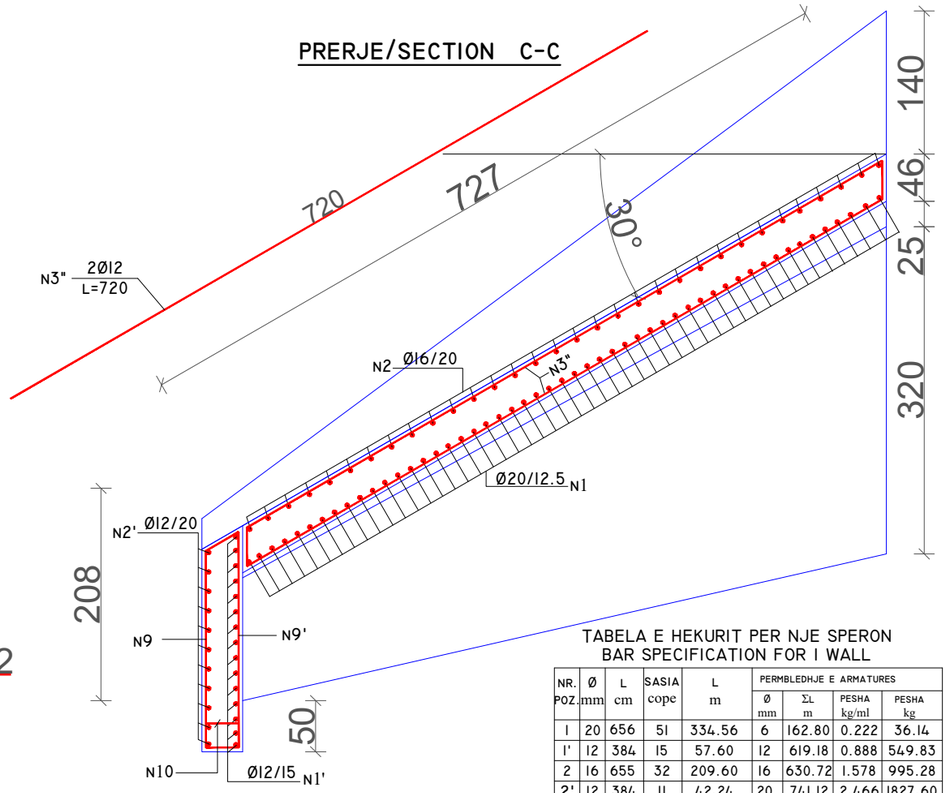

PRERJE/SECTION 3-3

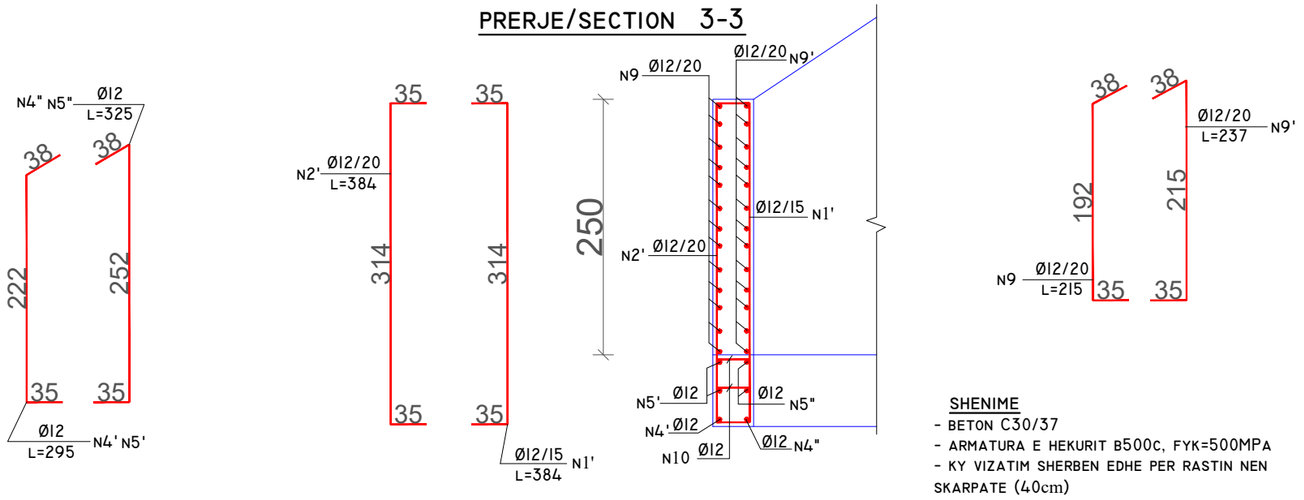

TABELA E HEKURIT PER NJE SPERON
BAR SPECIFICATION FOR I WALL

NR. POZ.	Ø mm	L cm	SASIA cope	L m	PERMBLEDHJE E ARMATURES Ø mm	ΣL m	PESHA kg/ml	PESHA kg
1	20	656	51	334.56	6	162.80	0.222	36.14
1'	12	384	15	57.60	12	619.18	0.888	549.83
2	16	655	32	209.60	16	630.72	1.578	995.28
2'	12	384	11	42.24	20	741.12	2.466	1827.60
3	12	760	34	258.40				
3'	12	312	54	168.48				
3"	12	720	2	14.40				
4	20	484	42	203.28				
4'	12	295	1	2.95				
4"	12	325	1	3.25				
5	20	484	42	203.28				
5'	12	295	2	5.90				
5"	12	325	2	6.50				
6	16	752	56	421.12				
7	6	84	93	78.12				
8	6	73	116	84.68				
9	12	215	13	27.95				
9'	12	237	13	30.81				
10	12	35	2	0.70				
HEKURI PERIODIK/STEEL WEIGHT							kg	3408.85
BETON/CONCRETE C30/37							m³	31.05

SHENIME
- BETON C30/37
- ARMATURA E HEKURIT B500C, FYK=500MPA
- KY VIZATIM SHERBEN EDHE PER RASTIN NEN SKARPATE (40cm)

TECHNICAL NOTES
-CONCRETE C30/37
- IRON ARMOR B500C, FYK=500MPA
- THIS DRAWING ALSO SERVES FOR THE CASE UNDER THE SLOPE (40CM)

INVESTITORI / INVESTOR
"Autoriteti Rrugor Shqiptar"
Address: Rr. "Sami Frasheri", Nr 33, Tirane
Mob: 04 222 3600
E-mail: info@arrsh.gov.al

InfraKonsult konsulence inxhinierike
HMK-CONSULTING SH.P.K Konsulence-Projektim-Mbikqyrje
JV: "InfraKonsult" shpk & "HMK-Consulting" shpk

"Studim Projektim - Zgjerimi i segmentit rrugor dalje Elbasan-Prrenjas-Qafe Thane", (Faza II) / "Design Study of road segment exit Elbasan-Prrenjas-Qafe Thane" (Phase II)

Armimi i mureve b/a ne hyrje / Inlet walls reinforcement - Km 8+766.35

FAZA - PROJEKT ZBATIM
PHASE - DETAIL DESIGN

SHKALLA / SCALE	1:60	Data: Mars 2023 / Date: march 2023
VIZATIMI / PAGE	Nr: / No: E (6)	

PROJEKTUES: / DESIGN ENGINEERS:
Ing./Eng. Sokol METOJA
Ing./Eng. Redi STRUGA
Ing./Eng. Orgest MËRTIKA